ROW CROP PLANTERS

PST PLUS FLEX - FRAME 3245/3495/4045/4395/4845/5345/5745 - CSU (FROM 04/2022)

Code: 0501093219

Series: S-0116

Revision: 00

Date Revision: JUNHO/2022

PARTS CATALOGUE

TATU MARCHESAN

PRODUCTS

Code	Description
0111380348	PST PLUS FLEX 3245/7E450 CPERA D DC20 CSU S-0116
0111380159	PST PLUS FLEX 3245/7E450 CPRA D DC18 CSU S-0116
0111380161	PST PLUS FLEX 3245/7E450 SPT D/HDA DC18 CSU S-0116
0111380302	PST PLUS FLEX 3245/7E450 SPT DAOC/HDA DC20 CSU S-0116
0111380116	PST PLUS FLEX 3495/8E450 CPRA D/HDA DC18 CSU CEAC S-0116
0111380204	PST PLUS FLEX 4045/8E500 SPCRR CI MH DC20 CSU S-0116
0111380182	PST PLUS FLEX 4045/8E500 SPT D/HDA MH DC20 CSU S-0116
0111380327	PST PLUS FLEX 4045/9E450 CPERA D DC18 CSU S-0116
0111380268	PST PLUS FLEX 4045/9E450 CPERA D DC20 CSU S-0116
0111380323	PST PLUS FLEX 4045/9E450 CPERA D DPLEB18 CSU S-0116
0111380322	PST PLUS FLEX 4045/9E450 CPERA D/HDA DC20 CSU S-0116
0111380266	PST PLUS FLEX 4045/9E450 CPRA CI MH DC20 CSU S-0116
0111380082	PST PLUS FLEX 4045/9E450 CPRA D DC18 CSU S-0116
0111380314	PST PLUS FLEX 4045/9E450 CPRA DAOC/H CI MH DC20 CSU S-0116
0111380078	PST PLUS FLEX 4045/9E450 CPRA H DC20 CSU S-0116
0111380074	PST PLUS FLEX 4045/9E450 CPRA HDA MH DC20 CSU S-0116
0111380130	PST PLUS FLEX 4045/9E450 RPA D MH DC18 CSU S-0116
0111380197	PST PLUS FLEX 4045/9E450 SPT CI DC20 CSU S-0116
0111380303	PST PLUS FLEX 4045/9E450 SPT CI MH DC20 CSU S/LUB S-0116
0111380167	PST PLUS FLEX 4045/9E450 SPT D DC18 CSU PM400 S-0116
0111380169	PST PLUS FLEX 4045/9E450 SPT D DC18 CSU S-0116
0111380194	PST PLUS FLEX 4045/9E450 SPT D/HDA DC18 CSU S-0116
0111380195	PST PLUS FLEX 4045/9E450 SPT D/HDA MH DC20 CSU S-0116
0111380147	PST PLUS FLEX 4045/9E450 SPT H DC18 CSU S-0116
0111380349	PST PLUS FLEX 4395/10E450 CPERA D DC20 CSU S-0116
0111380136	PST PLUS FLEX 4395/9E500 SPCRR MH DC20 CSU S-0116
0111380223	PST PLUS FLEX 4395/9E500 SPT CI MH DC20 CSU PM400 S-0116
0111380258	PST PLUS FLEX 4395/9E500 SPT CI MH DC20 CSU S-0116
0111380137	PST PLUS FLEX 4845/10E500 SPCRR MH DC20 CSU S-0116
0111380316	PST PLUS FLEX 4845/10E500 SPT CI DC20 CSU S-0116

ATTENTION: IMPORTANT

Marchesan S.A. reserves the right to improve and/or modify the technical features of its products, without obligation to do the same with those products already sold and without pior knowledge of the dealer or the consumer. The photos are only illustrative.

PRODUCTS

0111380312	PST PLUS FLEX 4845/10E500 SPT D DC20 CSU S-0116
0111380272	PST PLUS FLEX 4845/11E450 CPERA CI DC20 CSU S-0116
0111380315	PST PLUS FLEX 4845/11E450 SPT D/HDA DC20 CSU S-0116
0111380128	PST PLUS FLEX 4845/11E450 SPT D/HDA MH DC18 CSU S-0116
0111380320	PST PLUS FLEX 4845/6E900 SPT CI MH DC20 CSU PM400 S-0116
0111380120	PST PLUS FLEX 5345/11E500 SPCRR MH DC18 CSU S-0116
0111380084	PST PLUS FLEX 5345/12E450 CPRA DOC20 CSU S-0116
0111380385	PST PLUS FLEX 5345/12E450 SPT CI MH DC20 CSU S-0116
0111380329	PST PLUS FLEX 5345/12E450 SPT DAOC/HDA DC20 CSU S-0116
0111380387	PST PLUS FLEX 5745/12E500 SPCRR CI MH DC20 CSU S-0116
0111380394	PST PLUS FLEX 5745/12E500 SPT D/HP3F CI MH DC20 CSU S-0116
0111380335	PST PLUS FLEX 5745/13E450 CPCL DAOC MH DOC20 CSU PM400 S-0116

ATTENTION: IMPORTANT

Marchesan S.A. reserves the right to improve and/or modify the technical features of its products, without obligation to do the same with those products already sold and without pior knowledge of the dealer or the consumer. The photos are only illustrative.

INDEX

0909096187	FRAME ASSY - 3245/3495/4045/4395/4845/5345/5745	1
0511057196	FRAME WITH WHEEL AXLE - 3245	2
0511057371	FRAME WITH WHEEL AXLE - 3495	3
0511057303	FRAME WITH WHEEL AXLE - 4045	4
0511057361	FRAME WITH WHEEL AXLE - 4395	5
0511057336	FRAME WITH WHEEL AXLE - 4845	6
0511057382	FRAME WITH WHEEL AXLE - 5345	7
0521050047	FRAME WITH WHEEL AXLE - 5745	8
0511058655	CYLINDER SET - 3245/3495/4045/4395	9
0511058656	CYLINDER SET - 4845/5345/5745	10
0521045510	HYDRAULIC CYLINDER	11
0521054233	HYDRAULIC CYLINDER	12
0511057206	HANDRAIL ASSEMBLY - 3245	13
0511057369	HANDRAIL ASSEMBLY - 3495	14
0511057306	HANDRAIL ASSEMBLY - 4045	15
0511057359	HANDRAIL ASSEMBLY - 4395	16
0511057330	HANDRAIL ASSEMBLY - 4845	17
0511057386	HANDRAIL ASSEMBLY - 5345	18
0521050055	HANDRAIL ASSEMBLY - 5745	19
0511059383	HANDRAIL INTERNAL FIXER	20
0511057205	PLATFORM ASSEMBLY - 3245	21
0511057370	PLATFORM ASSEMBLY - 3495	22
0511057307	PLATFORM ASSEMBLY - 4045	23
0511057358	PLATFORM ASSEMBLY - 4395	24
0511057331	PLATFORM ASSEMBLY - 4845	25
0511057385	PLATFORM ASSEMBLY - 5345	26
0521050048	PLATFORM ASSEMBLY - 5745	27
0511056536	LADDER ASSEMBLY	28
0511057229	DRAWBAR ASSEMBLY - 3245	29
0511057333	DRAWBAR ASSEMBLY - 3495/4045/4395/4845/5345/5745	30
0511054601	HITCH ARTICULATED TRACTOR	31
0511057270	DRAWBAR EXTENDER	32
0511056736	HOSE SUPPORT	33
0511054971	JACK ASSEMBLY	34
0511057266	HYDRAULIC SYSTEM ASSEMBLY - 3245/3495/4045/4395	35
0511057329	HYDRAULIC SYSTEM ASSEMBLY - 4845/5345/5745	36
0511058653	WHEELS WITH TRACTION SPRING	37
0511058654	WHEEL SUPPORT	38
0511052770	WHEEL WITH TIRE	39
0511052769	WHEEL WITH TRANSMISSION WITHOUT TIRE	40
0503062159	WHEEL WITH TIRE	41
0501058241	WHEEL SUPPORT CHAIN TENSIONER	42
0501058240	WHEEL FASTENER WITH TENSIONER	43
0501058242	WHEEL MOBILE CHAIN TENSIONER	44
0501058243	INTERMEDIATE WHEEL CHAIN TENSIONER	45
0501058244	WHEEL FIXED CHAIN TENSIONER	46
0501058239	WHEEL CHAIN TENSIONER BEARING	47
0521050054	WHEELS TRACTION SPRING WITHOUT TRANSMISSION	48
0521050053	WHEEL SUPPORT WITHOUT TRANSMISSION	49
0521055239	WHEEL WITH TIRE WITHOUT TRANSMISSION	50
0521055244	WHEEL WITHOUT TRANSMISSION WITHOUT TIRE	51
0511057230	FERTILIZER BOX ASSEMBLY - 3245	52
0511057213	BOX SUPPORT WITH DISTRIBUTOR - 3245	53
0511057364	FERTILIZER BOX ASSEMBLY - 3495	54
0511057366	BOX SUPPORT WITH DISTRIBUTOR - 3495	55

INDEX

0511057305	FERTILIZER BOX ASSEMBLY - 4045	56
0511057309	BOX SUPPORT WITH DISTRIBUTOR - 4045	57
0511057360	FERTILIZER BOX ASSEMBLY - 4395	58
0511057357	BOX SUPPORT WITH DISTRIBUTOR - 4395	59
0511057326	FERTILIZER BOX ASSEMBLY - 4845	60
0511057327	BOX SUPPORT WITH DISTRIBUTOR - 4845	61
0511057389	FERTILIZER BOX ASSEMBLY - 5345	62
0511057388	BOX SUPPORT WITH DISTRIBUTOR - 5345	63
0521050051	FERTILIZER BOX ASSEMBLY - 5745	64
0521050052	BOX SUPPORT WITH DISTRIBUTOR - 5745	65
0503062362	FERTILIZER BOX	66
0503062391	FERTILIZER BOX	67
0511051535	RIGHT SIDE FERTILIZER DISTRIBUTOR	68
0511051558	LEFT SIDE FERTILIZER DISTRIBUTOR	69
0501053788	3/4 SQUARE AXLE FASTENER	70
0501056271	GEARBOX CLOSED BEARING	71
0521050739	SINGLE SEED BOX - 3245/7 E450 - 3495/7 E500	72
0521050490	2 BOXES WITH 7 CONDUCTORS ASSEMBLY	73
0511059848	SINGLE SEED BOX - 3495/8 E450	74
0511058769	SINGLE SEED BOX - 4045/8 E500	75
0511058770	2 BOXES WITH 8 CONDUCTORS ASSEMBLY	76
0511058827	SINGLE SEED BOX - 4045/9 E450	77
0511058828	2 BOXES WITH 9 CONDUCTORS ASSEMBLY	78
0511058175	SINGLE SEED BOX - 4395/9 E500	79
0511058100	2 BOXES WITH 9 CONDUCTORS ASSEMBLY	80
0511059114	SINGLE SEED BOX - 4395/10 E450	81
0511059584	2 BOXES WITH 10 CONDUCTORS ASSEMBLY	82
0521059032	SINGLE SEED BOX - 4845/6 E900	83
0511059771	2 BOXES WITH 6 CONDUCTORS ASSEMBLY	84
0511058106	SINGLE SEED BOX - 4845/10 E500	85
0511057737	2 BOXES WITH 10 CONDUCTORS ASSEMBLY	86
0511058147	SINGLE SEED BOX - 4845/11 E450 - 5345/11 E500	87
0511057919	2 BOXES WITH 11 CONDUCTORS ASSEMBLY	88
0511059054	SINGLE SEED BOX - 5345/12 E450	89
0511058724	2 BOXES WITH 12 CONDUCTORS ASSEMBLY	90
0521050767	SINGLE SEED BOX - 5745/12 E500	91
0521050066	SINGLE SEED BOX - 5745/13 E450	92
0511058802	2 BOXES WITH 13 CONDUCTORS ASSEMBLY	93
0511058510	FIXER SUPPORT	94
0511057690	3" ARTICULATED SEED CONDUCTOR	95
0521055338	ROW SEED BEARING	96
0501053566	ROW SEED BEARING	97
0511057207	SEMI-ASSEMBLED HYDRAULIC MARKER - 3245	98
0511057311	SEMI-ASSEMBLED HYDRAULIC MARKER - 4045	99
0511057355	SEMI-ASSEMBLED HYDRAULIC MARKER - 4395	100
0511057328	SEMI-ASSEMBLED HYDRAULIC MARKER - 4845	101
0511057387	SEMI-ASSEMBLED HYDRAULIC MARKER - 5345	102
0521050114	SEMI-ASSEMBLED HYDRAULIC MARKER - 5745	103
0511058449	HYDRAULIC CYLINDER	104
0501054649	HBM SEQUENTIAL VALVE	105
0511058119	VALVE SUPPORT ASSEMBLY	106
0501053834	MALE QUICK COUPLER	107
0501050633	ROW MARKER DISK ASSEMBLY	108
0511053904	ROW MARKER DISC	109
0511059323	PLATFORM TRANSPORT SUPPORT	110

INDEX

0531051711	LABELS KIT - 3245	111
0521054061	LABELS KIT - 3495	112
0511057834	LABELS KIT - 4045	113
0511059457	LABELS KIT - 4395	114
0511057805	LABELS KIT - 4845	115
0511057835	LABELS KIT - 5345	116
0521050768	LABELS KIT - 5745	117
0511053179	TRACTOR COUPLING SHAFT	118
0511059129	TRANSMISSION ASSEMBLY - 3245	119
0511059590	TRANSMISSION ASSEMBLY - 3495	120
0511058658	TRANSMISSION ASSEMBLY - 4045	121
0511058985	TRANSMISSION ASSEMBLY - 4395	122
0511058379	TRANSMISSION ASSEMBLY - 4845	123
0511058712	ENSEMBLE TRANSMISSION 7.00 - 4845	124
0511058937	TRANSMISSION ASSEMBLY - 5345	125
0521050115	TRANSMISSION ASSEMBLY - 5745	126
0501052560	MOTOR AXLE SIGNAL	127
0511051434	TRANSMISSION ACTUATOR	128
0511047069	RIGHT SIDE TRANSMISSION ACTUATOR	129
0511047070	LEFT SIDE TRANSMISSION ACTUATOR	130
0511057265	TRANSMISSION CHAIN TENSIONER	131
0501052810	TRANSMISSION CHAIN TENSIONER ASSEMBLY	132
0511050652	CHAIN TENSIONER	133
0501053653	BEARING WITH GEAR 20Z 3/4 HEX SHAFT	134
0501053654	3/4 SEED TRANSMISSION DOUBLE BEARING	135
0521055335	RIGHT GEAR HOUSING SET	136
0511058381	RIGHT GEAR HOUSING	137
0521055337	LEFT GEAR HOUSING SET	138
0511058382	LEFT GEAR HOUSING	139
0501056447	CENTRAL DOUBLE GEAR HOUSING BEARING	140
0501048790	AXLE WITH RING	141
0501056443	GEAR HOUSING BEARING	142
0501056444	BEARING WITH ROLLING	143
0511057258	TENSIONER WITH GEAR	144
0511054363	CHAIN TENSIONER	145
0511057845	MANUAL CANISTER	146
0511059322	LIFTING SUPPORT ASSEMBLY	147
0521053445	MONITORING ASSEMBLY PLANTING SEEDS 09L PM400	148
0521053407	MONITORING ASSEMBLY PLANTING SEEDS 13L PM400	149
0909096188	SEED/FERTILIZER ROW ASSY	150
0511057277	FRONT SHORT SEED ROW WITH RIGHT TRANSMISSION	151
0521056500	FRONT SHORT SEED ROW WITH RIGHT TRANSMISSION WITHOUT LUBRIFICATION	152
0511057278	FRONT LONG SEED ROW WITH RIGHT TRANSMISSION	153
0521056501	FRONT LONG SEED ROW WITH RIGHT TRANSMISSION WITHOUT LUBRIFICATION	154
0511058766	BEARING	155
0511057159	TRANSMISSION BOX SEED ROW	156
0511057269	CHAIN TENSIONER	157
0511059872	BEARING	158
0511058512	PROTECTION COVER	159
0511056621	RIGHT REAR SEED ROW	160
0511056622	LEFT REAR SEED ROW	161
0511051888	FIXING BASE SYSTEM SYSTEM TITANIUM ASSY 5/8	162
0511056585	RIGHT 15" X 15" DOUBLE DISC SEED	163

INDEX

0511056586	15 X 15 SEED DDD LEFT	164
0511052301	SUPPORT DDD 15 RIGHT	165
0511052302	LH SUPPORT DDD GUIDE	166
0511053173	CUBE LOW RIGHT WITH DISC 15	167
0511053172	LEFT LOW CUBE WITH DISC 15	168
0521054770	RIGHT REAR SEED ROW	169
0521054771	LEFT REAR SEED ROW	170
0521054818	BASE 5/8 FIXATION WITHOUT ASSY LUBRICATION	171
0521055870	RIGHT DOUBLE DISC SEED 15 X 15	172
0521055871	LEFT DOUBLE DISC SEED 15 X 15	173
0521055866	HUB RIGHT QUICK-CHANGE DPL 15 X 4.00 FERTILIZER / SEED	174
0521055867	HUB LEFT QUICK-CHANGE DPL 15 X 4.00 FERTILIZER / SEED	175
0521055864	ASSY RIGHT HUB DDD FERTILIZER / SEED	176
0521055865	ASSY LEFT HUB DDD FERTILIZER / SEED	177
0511058635	SHORT FERTILIZER ROW DDD 18" BLADE DISC	178
0511058639	SHORT FERTILIZER ROW WITH DDD/DC20	179
0511059051	SHORT FERTILIZER ROW	180
0511058636	LONG FERTILIZER ROW DDD 18" BLADE DISC	181
0511058640	LONG FERTILIZER ROW WITH DDD/DC20	182
0511059052	SHORT ROW FERTILIZER	183
0511053208	DDD FERTILIZER 15 X 15 RIGHT MINOR	184
0511053209	DDD FERTILIZER 15 X 15 LEFT MINOR	185
0511058629	18” COULTER BLADE ASSY FOR SHORT ROW	186
0511058630	20" DISC CUT	187
0511059050	DOC 20" ASSY	188
0521056477	SHORT FERTILIZER ROW DC20 WITHOUT LUBRICATION	189
0521056479	LONG DC20 FERTILIZER ROW WITHOUT LUBRICATION	190
0521054768	RIGHT DDD FERTILIZER WITH SUPPORT	191
0521054769	LEFT DDD FERTILIZER WITH SUPPORT	192
0521055868	RIGHT DUAL FERTILIZER DISC	193
0521055869	LEFT DUAL FERTILIZER DISC	194
0521056476	DC 20" ASSY	195
0521059094	SIGMA SOY SINGLE SEED SYSTEM	196
0503063223	SEMI-ASSEMBLED SINGLE SIGMA SEED BOX	197
0531051514	SIGMA SOY SEED SYSTEM	198
0511057289	ASSY SEED DEFLECTOR	199
0521046122	DEPTH SYSTEM / COMPACTOR ASSY	200
0511058650	SEMI-MOUNTED DEPTH CONTROL	201
0511058651	RIGHT ARM WHEEL DEPTH WITH CUBE	202
0511058652	LEFT ARM WHEEL DEPTH WITH CUBE	203
0501052627	ASSY DEPTH WHEEL BOX	204
0501052297	DEPTH WHEELS REGULATOR ASSY	205
0501052538	DEPTH BAND WITH ARMS	206
0511054333	COMPACT WHEEL RIGHT WITH BEARING	207
0511054334	COMPACT WHEEL LEFT WITH BEARING	208
0501052908	COMPACTOR WHEEL WITH BEARING	209
0521054984	DEPTH/COMPACTOR SYSTEM - SPT	210
0521054986	DEPTH CONTROL SEMI MOUNTED WITHOUT LUBRICATION	211
0521054988	RIGHT ARM WITH HUB WITHOUT LUBRIFICATION	212
0521054987	LEFT ARM WITH HUB WITHOUT LUBRIFICATION	213
0521055016	CUBE DEPTH CONTROL WITHOUT LUBRICATION	214
0521055017	RIGHT COMPACTOR WHEEL	215
0521054990	LEFT COMPACTOR WHEEL	216
0521054989	RUBBER WHEEL ASSEMBLY WITHOUT LUBRICATION	217

INDEX

0521056317	DEPTH CONTROL WITH LEVER ANGLE REGULATOR AXIS CPERA	.....	218
0521056313	RIGHT ARM WHEEL DEPTH WITH CUBE CPERA	.....	219
0521056314	LEFT ARM WHEEL DEPTH WITH CUBE CPERA	.....	220
0521056316	DEPTH WHEEL BOX WITH COMPLETE ANGLE ADJUSTING AXLE	.....	221
0511055819	DEPTH BAND WITH RIM	.....	222
0521044538	DEPHT WHIT REGULACION ANGLE COMPACT CONTROL	.....	223
0511052971	SEMI-ASSEMBLED DEPTH CONTROL WITH THREAD	.....	224
0511059324	RIGHT ARM COVERED WHEEL ASSEMBLED	.....	225
0511059325	LEFT ARM COVERED WHEEL ASSEMBLED	.....	226
0511051546	CUBE RIGHT CONTROL DEPTH	.....	227
0511051547	LEFT CUBE CONTROL DEPTH	.....	228
0511051583	SEMI-ASSEMBLED DEPTH WHEEL HUB	.....	229
0511052970	SYSTEM COMPACTOR V SEMI MOUNTED	.....	230
0521051424	WHEEL SYSTEM DEPTH/COMPACTOR QUICK ADJUSTMENT	.....	231
0501056769	DEPTH WHEELS REGULATOR ASSY	.....	232
0521051423	COMPACTOR SUPPORT	.....	233
0511050077	WHEEL STRIPED	.....	234
0511052287	DEPTH WHEEL HUB ASSY	.....	235
0521046647	DEPTH CONTROL PRESS WHEELS	.....	236
0511059684	DEPTH CONTROL RPA	.....	237
0511059682	RIGHT ARM DEPTH CONTROL WHEEL	.....	238
0511059683	LEFT ARM DEPTH CONTROL WHEEL	.....	239
0501058553	DEPHT WHEELS BOX RPA	.....	240
0521059305	DEPTH/WIDE COMPACTOR SYSTEM	.....	241
0521059304	DEPTH CONTROL/WIDE COMPACTOR	.....	242
0521055431	LONG COMPACTOR WHEEL	.....	243
0501110804	SCARIFIER ROD WITH POINT	.....	244
0501110814	SCARIFIER ROD WITH IAPAR NOZZLE	.....	245
0521050525	FIXER FERTILIZER CONDUCTOR	.....	246
0531052986	PIVOT SUPPORT	.....	247
0503063647	SIGMA CORN DISC SET	.....	248
0503063648	SIGMA SOY DISC SET	.....	249
0511052024	FAST CLOSING SET	.....	250
0521057957	FIXED ROD EXTENSION WITH FIXATION	.....	251
0521059218	18" CURVED CORRUGATED FERTILIZER DISC	.....	252
0521059223	18" SEMI-ASSEMBLED FERTILIZER DISC	.....	253
0521050168	MOUNTED FERTILIZER CONDUCTOR	.....	254
0521053949	SCARIFIER SPINDLE WITH SOCKET RIGHT	.....	255
0521053948	SCARIFIER SPINDLE WITH SOCKET LEFT	.....	256
0521053950	HDA AUTOMATIC DISARM	.....	257
0521053951	STEM	.....	258
0521053932	ROD WITH BEAK 0869	.....	259

FRAME ASSY - 3245/3495/4045/4395/4845/5345/5745

0909096187

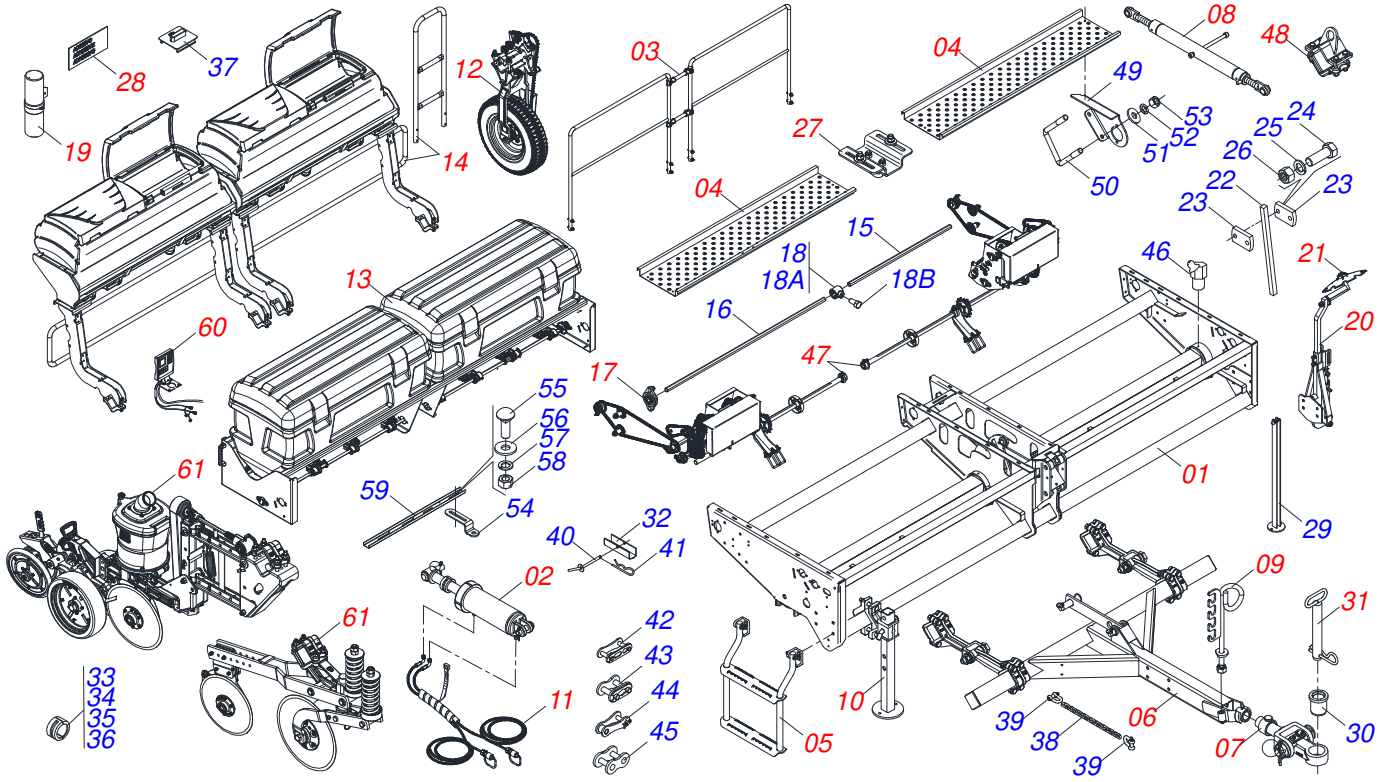

Item	Code	Description	See page	3245	3495	4045	4395	4845	5345	5745
01	0511057196	FRAME WITH WHEEL AXLE - 3245	2	01	00	00	00	00	00	00
01.	0511057371	FRAME WITH WHEEL AXLE - 3495	3	00	01	00	00	00	00	00
01..	0511057303	FRAME WITH WHEEL AXLE - 4045	4	00	00	01	00	00	00	00
01...	0511057361	FRAME WITH WHEEL AXLE - 4395	5	00	00	00	01	00	00	00
01....	0511057336	FRAME WITH WHEEL AXLE - 4845	6	00	00	00	00	01	00	00
01.....	0511057382	FRAME WITH WHEEL AXLE - 5345	7	00	00	00	00	00	01	00
01.....	0521050047	FRAME WITH WHEEL AXLE - 5745	8	00	00	00	00	00	00	01
02	0511058655	CYLINDER SET - 3245/3495/4045/4395	9	01	01	01	01	00	00	00
02.	0511058656	CYLINDER SET - 4845/5345/5745	10	00	00	00	00	01	01	01
03	0511057206	HANDRAIL ASSEMBLY - 3245	13	01	00	00	00	00	00	00
03.	0511057369	HANDRAIL ASSEMBLY - 3495	14	00	01	00	00	00	00	00
03..	0511057306	HANDRAIL ASSEMBLY - 4045	15	00	00	01	00	00	00	00
03...	0511057359	HANDRAIL ASSEMBLY - 4395	16	00	00	00	01	00	00	00
03....	0511057330	HANDRAIL ASSEMBLY - 4845	17	00	00	00	00	01	00	00
03.....	0511057386	HANDRAIL ASSEMBLY - 5345	18	00	00	00	00	00	01	00
03.....	0521050055	HANDRAIL ASSEMBLY - 5745	19	00	00	00	00	00	00	01
04	0511057205	PLATFORM ASSEMBLY - 3245	21	01	00	00	00	00	00	00
04.	0511057370	PLATFORM ASSEMBLY - 3495	22	00	01	00	00	00	00	00
04..	0511057307	PLATFORM ASSEMBLY - 4045	23	00	00	01	00	00	00	00
04...	0511057358	PLATFORM ASSEMBLY - 4395	24	00	00	00	01	00	00	00
04....	0511057331	PLATFORM ASSEMBLY - 4845	25	00	00	00	00	01	00	00
04.....	0511057385	PLATFORM ASSEMBLY - 5345	26	00	00	00	00	00	01	00
04.....	0521050048	PLATFORM ASSEMBLY - 5745	27	00	00	00	00	00	00	01
05	0511056536	LADDER ASSEMBLY	28	02	02	02	02	02	02	02
06	0511057229	DRAWBAR ASSEMBLY - 3245	29	01	00	00	00	00	00	00
06.	0511057333	DRAWBAR ASSEMBLY - 3495/4045/4395/4845/5345/5745	30	00	01	01	01	01	01	01
07	0511054601	HITCH ARTICULATED TRACTOR	31	01	01	01	01	01	01	01
08	0511057270	DRAWBAR EXTENDER	32	01	01	01	01	01	01	01
09	0511056736	HOSE SUPPORT	33	01	01	01	01	01	01	01
10	0511054971	JACK ASSEMBLY	34	02	02	02	02	02	02	02

Item	Code	Description	See page	3245	3495	4045	4395	4845	5345	5745
11	0511057266	HYDRAULIC SYSTEM ASSEMBLY - 3245/3495/4045/4395	35	01	01	01	01	00	00	00
11.	0511057329	HYDRAULIC SYSTEM ASSEMBLY - 4845/5345/5745	36	00	00	00	00	01	01	01
12	0511058653	WHEELS WITH TRACTION SPRING	37	02	04	04	04	04	04	04
12.	0521050054	WHEELS TRACTION SPRING WITHOUT TRANSMISSION	48	00	00	00	00	00	00	02
13	0511057230	FERTILIZER BOX ASSEMBLY - 3245	52	01	00	00	00	00	00	00
13.	0511057364	FERTILIZER BOX ASSEMBLY - 3495	54	00	01	00	00	00	00	00
13..	0511057305	FERTILIZER BOX ASSEMBLY - 4045	56	00	00	01	00	00	00	00
13...	0511057360	FERTILIZER BOX ASSEMBLY - 4395	58	00	00	00	01	00	00	00
13....	0511057326	FERTILIZER BOX ASSEMBLY - 4845	60	00	00	00	00	01	00	00
13.....	0511057389	FERTILIZER BOX ASSEMBLY - 5345	62	00	00	00	00	00	01	00
13.....	0521050051	FERTILIZER BOX ASSEMBLY - 5745	64	00	00	00	00	00	00	01
14	0521050739	SINGLE SEED BOX - 3245/7 E450 - 3495/7 E500	72	01	01	00	00	00	00	00
14.	0511059848	SINGLE SEED BOX - 3495/8 E450	74	00	01	00	00	00	00	00
14..	0511058769	SINGLE SEED BOX - 4045/8 E500	75	00	00	01	00	00	00	00
14...	0511058827	SINGLE SEED BOX - 4045/9 E450	77	00	00	01	00	00	00	00
14....	0511058175	SINGLE SEED BOX - 4395/9 E500	79	00	00	00	01	00	00	00
14.....	0511059114	SINGLE SEED BOX - 4395/10 E450	81	00	00	00	01	00	00	00
14.....	0521059032	SINGLE SEED BOX - 4845/6 E900	83	00	00	00	00	01	00	00
14.....	0511058106	SINGLE SEED BOX - 4845/10 E500	85	00	00	00	00	01	00	00
14.....	0511058147	SINGLE SEED BOX - 4845/11 E450 - 5345/11 E500	87	00	00	00	00	01	01	00
14.....	0511059054	SINGLE SEED BOX - 5345/12 E450	89	00	00	00	00	00	01	00
14.....	0521050767	SINGLE SEED BOX - 5745/12 E500	91	00	00	00	00	00	00	01
14.....	0521050066	SINGLE SEED BOX - 5745/13 E450	92	00	00	00	00	00	00	01
15	0571018910	3/4 X 1505 AXLE HEX		01	00	00	00	00	00	00
15.	0571018912	3/4 X 1630 AXLE HEX		00	01	00	00	00	00	00
15..	0571018914	3/4 X 1905 AXLE HEX		00	00	01	00	00	00	00
15...	0571018916	3/4 X 2080 AXLE HEX		00	00	00	01	00	00	00
15....	0571018918	3/4 X 2305 AXLE HEX		00	00	00	00	01	00	00
15.....	0571018920	3/4 X 2555 AXLE HEX		00	00	00	00	00	01	00
15.....	0581012908	3/4 X 2755 AXLE HEX		00	00	00	00	00	00	01
16	0571018911	3/4 X 1690 AXLE HEX		01	00	00	00	00	00	00
16.	0571018913	3/4 X 1815 AXLE HEX		00	01	00	00	00	00	00
16..	0571018915	3/4 X 2090 AXLE HEX		00	00	01	00	00	00	00
16...	0571018917	3/4 X 2265 AXLE HEX		00	00	00	01	00	00	00
16....	0571018919	3/4 X 2490 AXLE HEX		00	00	00	00	01	00	00
16.....	0571018921	3/4 X 2740 AXLE HEX		00	00	00	00	00	01	00
16.....	0581012909	3/4 X 2940 AXLE HEX		00	00	00	00	00	00	01
17	0521055338	ROW SEED BEARING	96	04	04	04	04	06	06	06
18	0511054314	TRANSMISSION AXLE LOCK SLEEVE		04	04	04	04	04	04	04
18A	0502012699	TRANSMISSION BOX LOCK SLEEVE		04	04	04	04	04	04	04
18B	0503010256	3/8" X 3/4" BOLT		04	04	04	04	04	04	04
19	0511057845	MANUAL CANISTER	146	01	01	01	01	01	01	01
20	0511057207	SEMI-ASSEMBLED HYDRAULIC MARKER - 3245	98	01	00	00	00	00	00	00
20.	0511057311	SEMI-ASSEMBLED HYDRAULIC MARKER - 4045	99	00	00	01	00	00	00	00
20..	0511057355	SEMI-ASSEMBLED HYDRAULIC MARKER - 4395	100	00	00	00	01	00	00	00
20...	0511057328	SEMI-ASSEMBLED HYDRAULIC MARKER - 4845	101	00	00	00	00	01	00	00
20....	0511057387	SEMI-ASSEMBLED HYDRAULIC MARKER - 5345	102	00	00	00	00	00	01	00
20.....	0521050114	SEMI-ASSEMBLED HYDRAULIC MARKER - 5745	103	00	00	00	00	00	00	01
21	0501050633	ROW MARKER DISK ASSEMBLY	108	02	02	02	02	02	02	02
22	0521013164	EXTENSOR		00	00	00	00	02	02	02
23	0501011310	FIXER LOCK		00	00	00	00	08	08	08
24	0503010706	BOLT 1/2 UNC X 4.1/2 C S G.5 ZN		00	00	00	00	08	08	08
25	0503010019	1/2" SPRING WASHER		00	00	00	00	08	08	08
26	0503010060	1/2" NUT		00	00	00	00	08	08	08
27	0511059323	PLATFORM TRANSPORT SUPPORT	110	04	04	04	04	04	04	04
28	0531051711	LABELS KIT - 3245	111	01	00	00	00	00	00	00
28.	0521054061	LABELS KIT - 3495	112	00	01	00	00	00	00	00

Item	Code	Description	See page	3245	3495	4045	4395	4845	5345	5745
28..	0511057834	LABELS KIT - 4045	113	00	00	01	00	00	00	00
28...	0511059457	LABELS KIT - 4395	114	00	00	00	01	00	00	00
28....	0511057805	LABELS KIT - 4845	115	00	00	00	00	01	00	00
28.....	0511057835	LABELS KIT - 5345	116	00	00	00	00	00	01	00
28.....	0521050768	LABELS KIT - 5745	117	00	00	00	00	00	00	01
29	0501065677	STRUT		02	02	02	02	02	02	02
30	0571014769	SLEEVE HITCH ARTICULATION 1.1/2		01	01	01	01	01	01	01
31	0511053179	TRACTOR COUPLING SHAFT	118	01	01	01	01	01	01	01
32	0521013022	TRANSPORT LOCK		01	01	01	01	02	02	02
33	0501047895	ROD STOP		01	01	01	01	02	02	02
34	0501047885	ROD STOP		01	01	01	01	02	02	02
35	0501047886	ROD STOP		01	01	01	01	02	02	02
36	0501047887	ROD STOP		01	01	01	01	02	02	02
37	0503032624	FERTILIZER BOX GUTTER		04	03	05	04	06	05	06
38	0503014120	CHAIN		01	01	01	01	01	01	01
39	0503014321	CABLE STEEL SHACKLE		02	02	02	02	02	02	02
40	0501068994	8,30 X 78 LOCK PIN		01	01	01	01	02	02	02
41	0503030168	HITCH PIN CLIP		01	01	01	01	02	02	02
42	0503010780	N-2050 AMENDMENT		02	02	02	02	02	02	02
43	0503010951	REDUCTION		04	04	04	04	04	04	04
44	0503011750	AMENDMENT WITH LOCK		06	06	06	06	06	06	06
45	0503011751	REDUCTION		06	06	06	06	06	06	06
46	0503010003	1845 GREASE FITTING		04	04	04	04	06	06	06
47	0511059129	TRANSMISSION ASSEMBLY - 3245	119	01	00	00	00	00	00	00
47.	0511059590	TRANSMISSION ASSEMBLY - 3495	120	00	01	00	00	00	00	00
47..	0511058658	TRANSMISSION ASSEMBLY - 4045	121	00	00	01	00	00	00	00
47...	0511058985	TRANSMISSION ASSEMBLY - 4395	122	00	00	00	01	00	00	00
47....	0511058379	TRANSMISSION ASSEMBLY - 4845	123	00	00	00	00	01	00	00
47.....	0511058712	ENSEMBLE TRANSMISSION 7.00 - 4845	124	00	00	00	00	01	00	00
47.....	0511058937	TRANSMISSION ASSEMBLY - 5345	125	00	00	00	00	00	01	00
47.....	0521050115	TRANSMISSION ASSEMBLY - 5745	126	00	00	00	00	00	00	01
48	0511059322	LIFTING SUPPORT ASSEMBLY	147	02	02	02	02	02	02	02
49	0571019315	BEARING SUPPORT AXLE HEX/SUPPORT PLATAFORM		02	02	02	02	04	04	04
50	0521014021	1/2" X 4.5" X 5.4" FASTENER		02	02	02	02	04	04	04
51	0511017302	FLAT WASHER		04	04	04	04	08	08	08
52	0503010019	1/2" SPRING WASHER		04	04	04	04	08	08	08
53	0503010060	1/2" NUT		04	04	04	04	08	08	08
54	0571017368	SUPPORT GUTTER		00	00	06	06	00	00	09
55	0501011643	3/8 X 1"BOLT		00	00	06	06	00	00	09
56	0501010984	FLAT WASHER		00	00	06	06	00	00	09
57	0503010025	3/8" SPRING WASHER		00	00	06	06	00	00	09
58	0503010026	3/8" NUT		00	00	06	06	00	00	09
59	0571018391	GUTTER 25 X 58 X 1200		00	00	00	00	00	00	04
59.	0571013990	GUTTER		00	00	02	02	00	00	00
60	0521053445	MONITORING ASSEMBLY PLANTING SEEDS 09L PM400	148	00	00	01	01	00	00	00
60.	0521053407	MONITORING ASSEMBLY PLANTING SEEDS 13L PM400	149	00	00	00	00	00	00	01
61	0909096188	SEED/FERTILIZER ROW ASSY	150	01	01	01	01	01	01	01

FRAME WITH WHEEL AXLE - 3245

0511057196

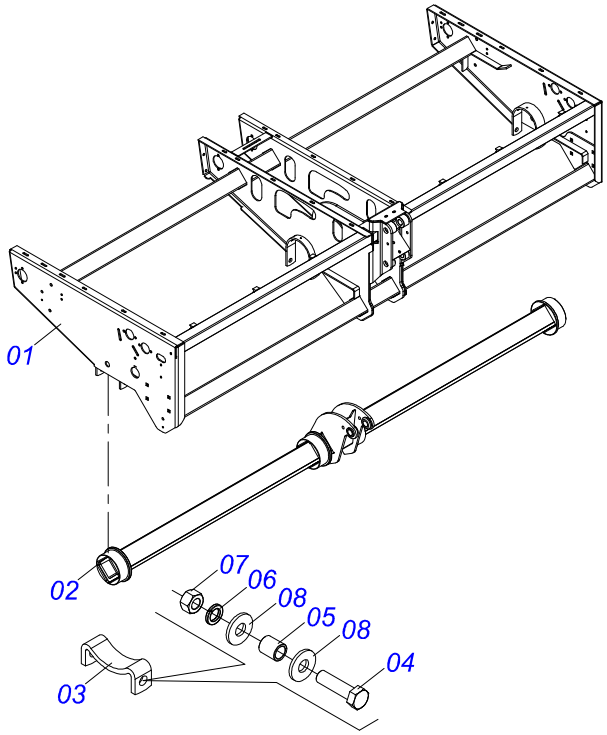

Item	Code	Description	See page	QT
01	0521065917	FRAME - 3245		01
02	0521065926	CARRYING-WHEELS PIVOT SHAFT 3245		01
03	0521013199	LOWER BEARING SEMI		04
04	0503810899	SCREW		08
05	0531013922	0.6" X 0.8" X 1" SLEEVE		08
06	0503011445	SPRING WASHER		08
07	0503810013	NUT 5/8 NC		08
08	0501812140	FLAT WASHER		16

FRAME WITH WHEEL AXLE - 3495

0511057371

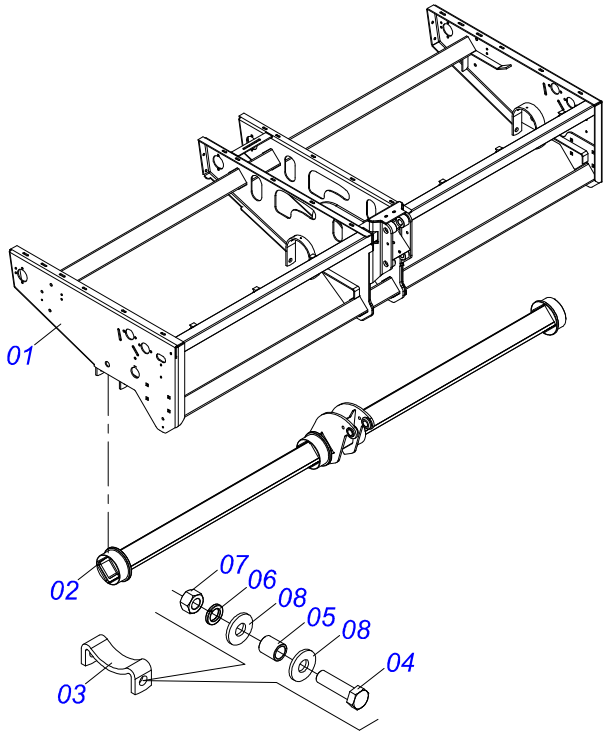

Item	Code	Description	See page	QT
01	0521065918	FRAME - 3495		01
02	0521065927	CARRYING-WHEELS PIVOT SHAFT 3495		01
03	0521013199	LOWER BEARING SEMI		04
04	0503810899	SCREW		08
05	0531013922	0.6" X 0.8" X 1" SLEEVE		08
06	0503011445	SPRING WASHER		08
07	0503810013	NUT 5/8 NC		08
08	0501812140	FLAT WASHER		16

FRAME WITH WHEEL AXLE - 4045

0511057303

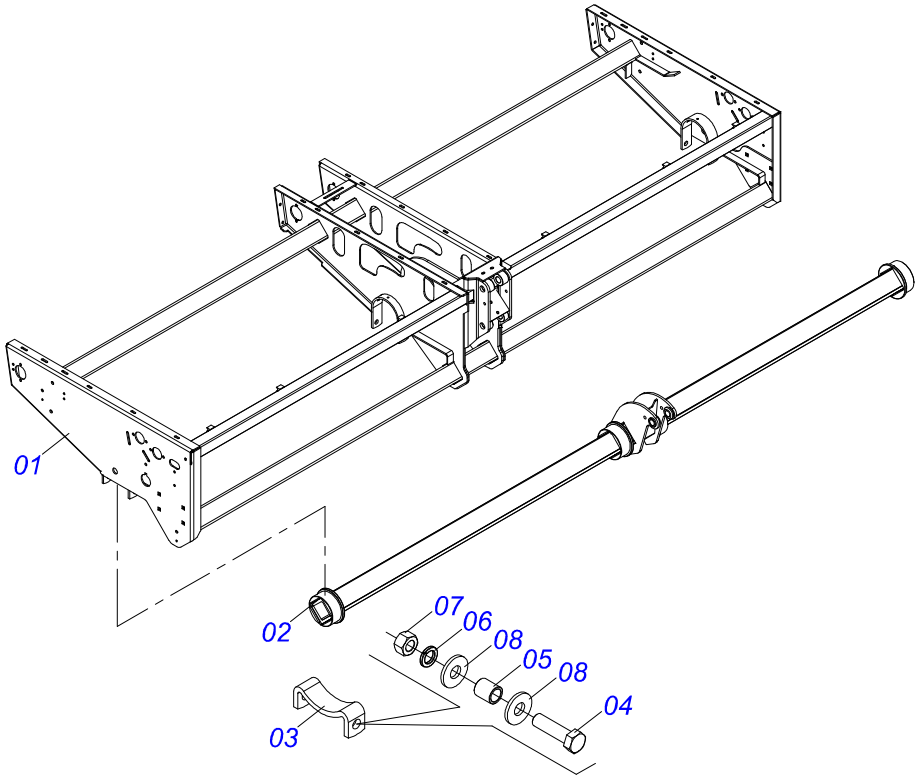

Item	Code	Description	See page	QT
01	0521065919	FRAME - 4045		01
02	0521065928	CARRYING-WHEELS PIVOT SHAFT - 4045		01
03	0521013199	LOWER BEARING SEMI		04
04	0503810899	SCREW		08
05	0531013922	0.6" X 0.8" X 1" SLEEVE		08
06	0503011445	SPRING WASHER		08
07	0503810013	NUT 5/8 NC		08
08	0501812140	FLAT WASHER		16

FRAME WITH WHEEL AXLE - 4395

0511057361

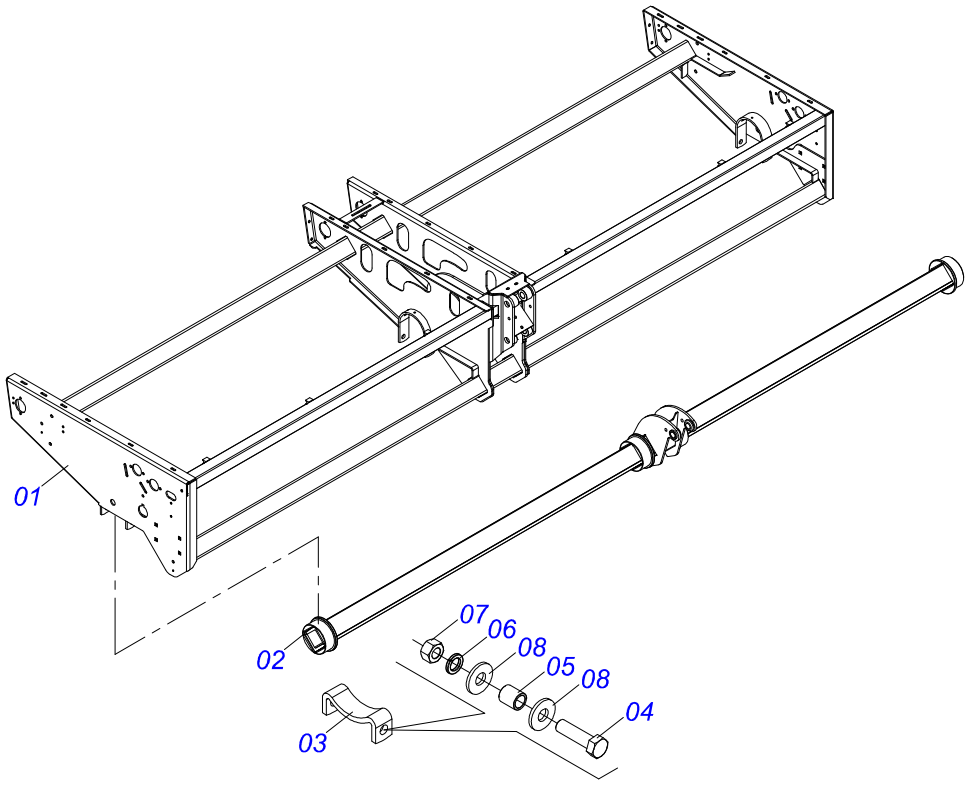

Item	Code	Description	See page	QT
01	0521065920	FRAME - 4395		01
02	0521065929	CARRYING-WHEELS PIVOT SHAFT - 4395		01
03	0521013199	LOWER BEARING SEMI		04
04	0503810899	SCREW		08
05	0531013922	0.6" X 0.8" X 1" SLEEVE		08
06	0503011445	SPRING WASHER		08
07	0503810013	NUT 5/8 NC		08
08	0501812140	FLAT WASHER		16

FRAME WITH WHEEL AXLE - 4845

0511057336

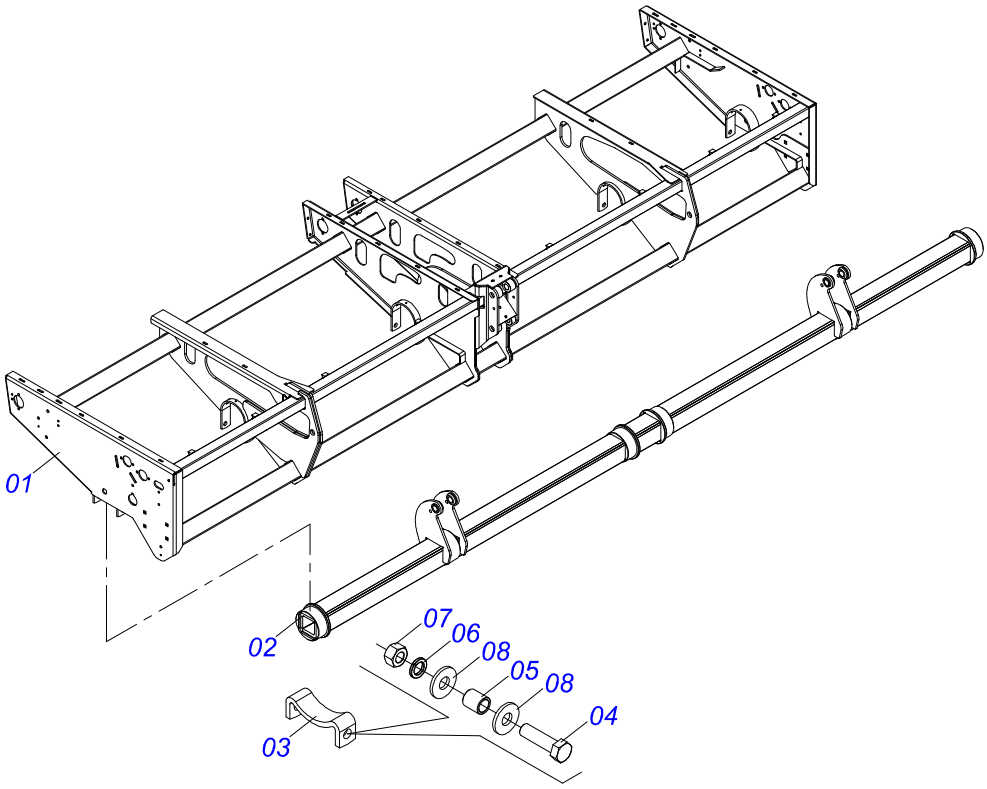

Item	Code	Description	See page	QT
01	0521065921	FRAME - 4845		01
02	0521065930	PIVOT SHAFT WHEEL - 4845		01
03	0521013199	LOWER BEARING SEMI		04
04	0503810899	SCREW		08
05	0531013922	0.6" X 0.8" X 1" SLEEVE		08
06	0503011445	SPRING WASHER		08
07	0503810013	NUT 5/8 NC		08
08	0501812140	FLAT WASHER		16

FRAME WITH WHEEL AXLE - 5345

0511057382

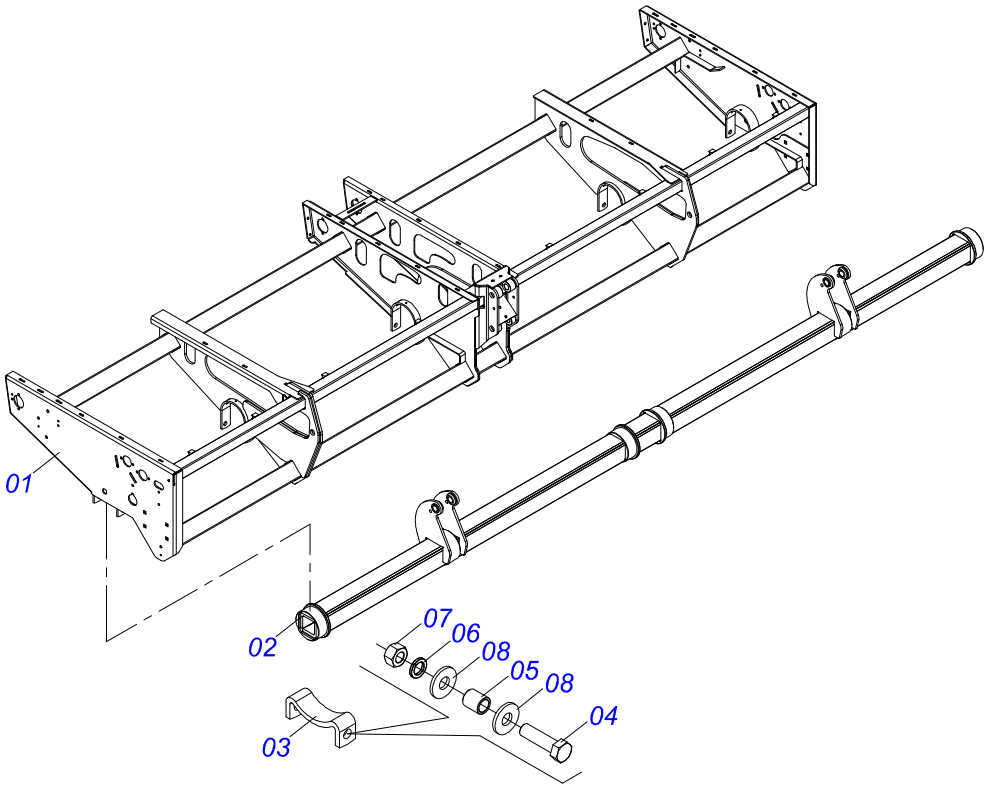

Item	Code	Description	See page	QT
01	0521065922	FRAME - 5345		01
02	0521065931	PIVOT SHAFT WHEEL - 5345		01
03	0521013199	LOWER BEARING SEMI		04
04	0503810899	SCREW		08
05	0531013922	0.6" X 0.8" X 1" SLEEVE		08
06	0503011445	SPRING WASHER		08
07	0503810013	NUT 5/8 NC		08
08	0501812140	FLAT WASHER		16

FRAME WITH WHEEL AXLE - 5745

0521050047

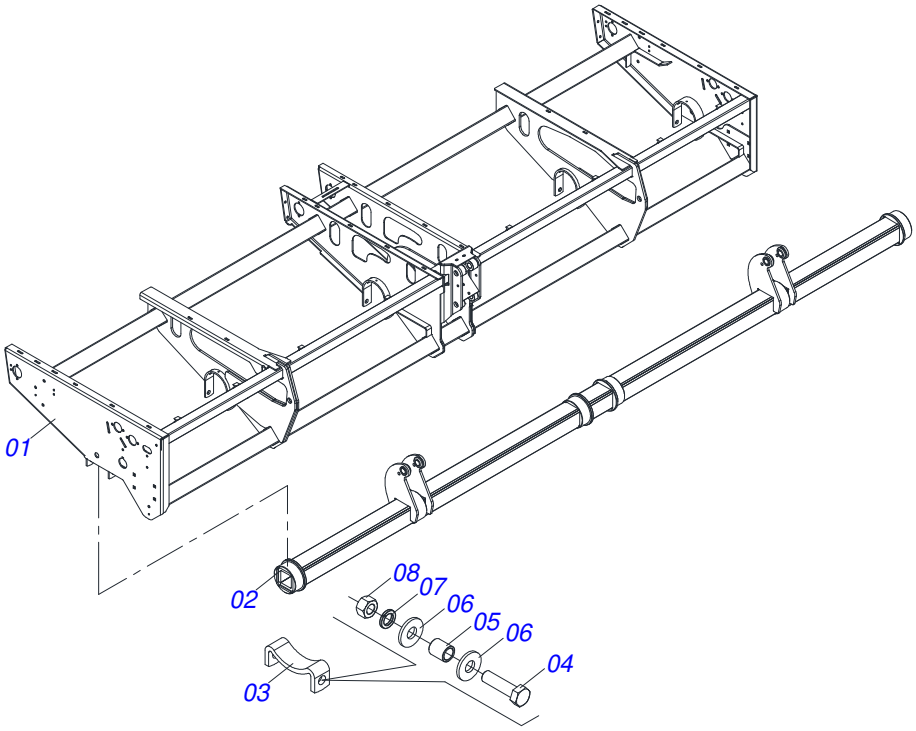

Item	Code	Description	See page	QT
01	0521067308	FRAME - 5745		01
02	0521067388	PIVOT SHAFT		01
03	0521013199	LOWER BEARING SEMI		04
04	0503810899	SCREW		08
05	0531013922	0.6" X 0.8" X 1" SLEEVE		08
06	0501812140	FLAT WASHER		16
07	0503011445	SPRING WASHER		08
08	0503810013	NUT 5/8 NC		08

CYLINDER SET - 3245/3495/4045/4395

0511058655

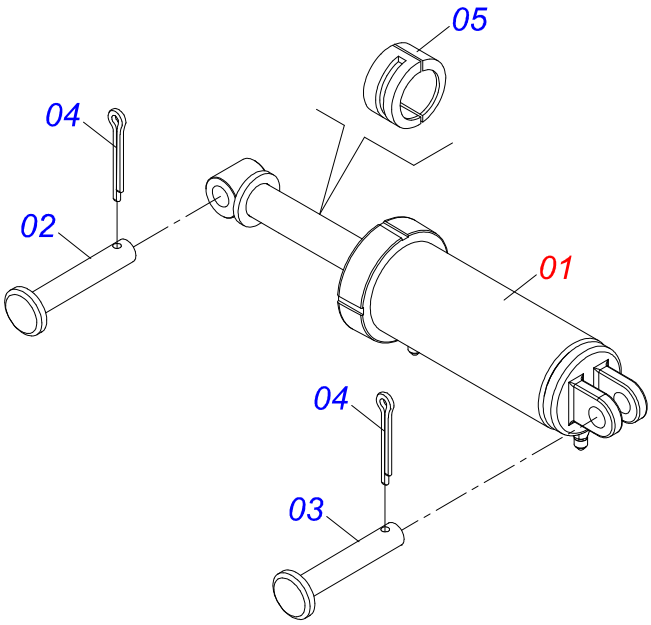

Item	Code	Description	See page	QT
01	0521045510	HYDRAULIC CYLINDER	11	01
02	0551014099	COUPLING SHAFT 31,75 X 185		01
03	0521010547	1.2" X 6.5" COUPLING SHAFT		01
04	0503010523	1/4" X 2" COTTERPIN		02
05	0501047888	ROD STOP		01

CYLINDER SET - 4845/5345/5745

0511058656

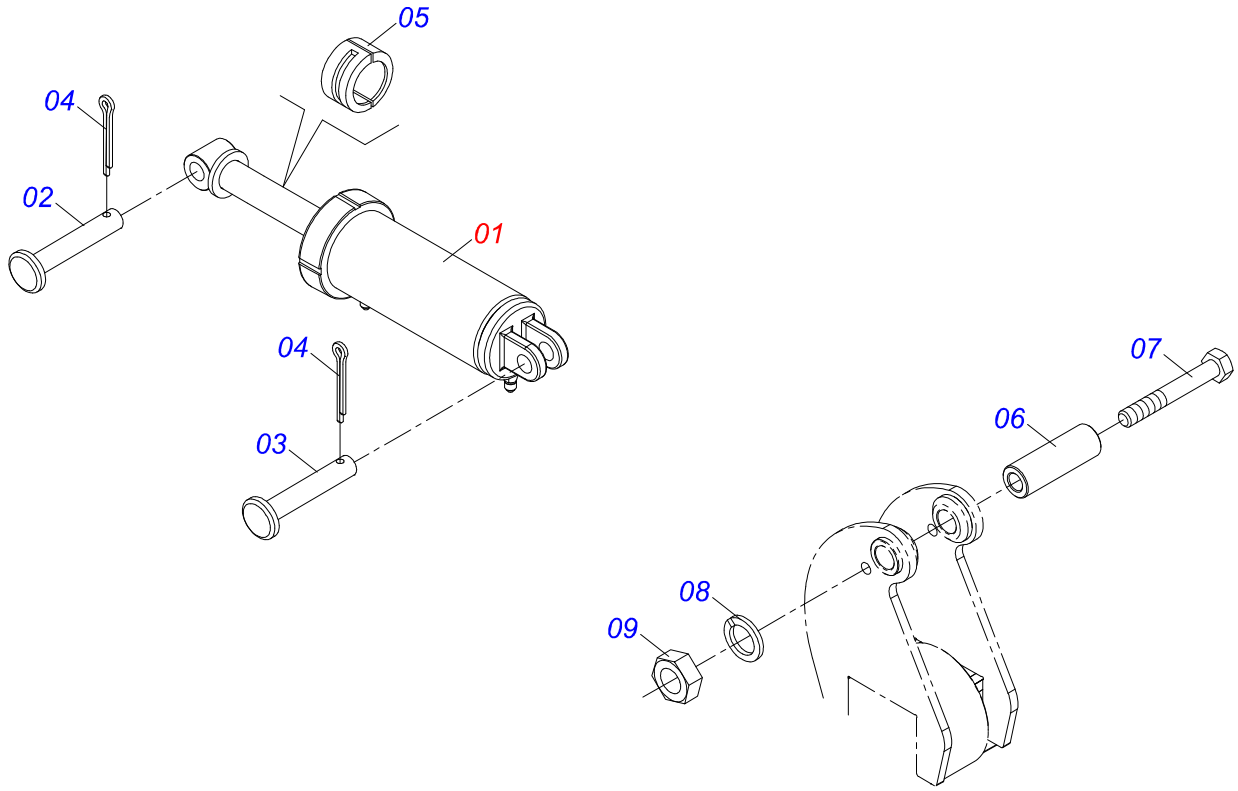

Item	Code	Description	See page	QT
01	0521054233	HYDRAULIC CYLINDER	12	02
02	0521012538	1.2" X 3.5" COUPLING SHAFT		02
03	0521010547	1.2" X 6.5" COUPLING SHAFT		02
04	0503010523	1/4" X 2" COTTERPIN		04
05	0501047888	ROD STOP		02
06	0571019384	SPACING SLEEVE 16,30 X 30 X 104		02
07	0501013867	BOLT 5/8 UNC X 6 CS G.5 ZN		02
08	0503010027	5/8" SPRING WASHER		02
09	0503010013	5/8" NUT		02

HYDRAULIC CYLINDER

0521045510

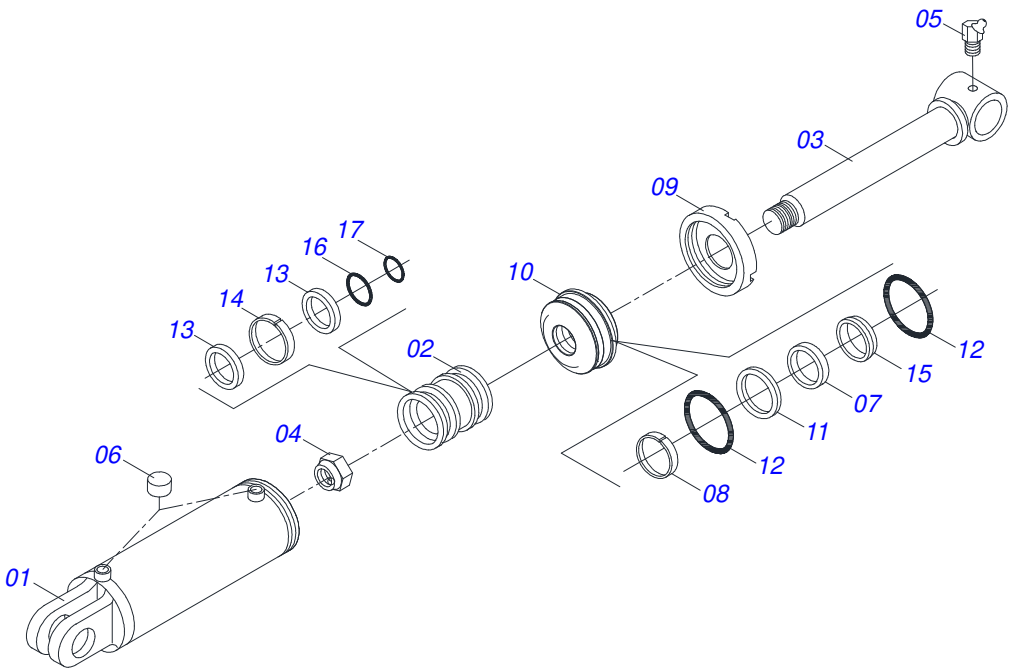

Item	Code	Description	See page	QT
01	0521065976	SHIRT 127 X 438,5		01
02	0581013698	PISTON		01
03	0521067585	EXTENDER 50.80 X 371.5 WITH BUSHING		01
04	0503010817	1.1/4" SELF LOCKING NUT		01
05	0503010003	1845 GREASE FITTING		01
06	0503030385	CYLINDER PLUG N-002		02
07	0503018439	WIPER SEAL		01
08	0503018150	RING GUIDE		01
09	0502010382	5" END CAP		01
10	0581010353	RING SUPPORT		01
11	0503018026	1870-2000-375 B GASKET		01
12	0503011453	O'RING		02
13	0503018152	O'RING		02
14	0503018024	RING BS		01
15	0503018025	RING GUIDE		01
16	0503010039	D-2000 SCRAPER RING		01
17	0503010173	2-220 N 3006-9B O'RING		01

HYDRAULIC CYLINDER

0521054233

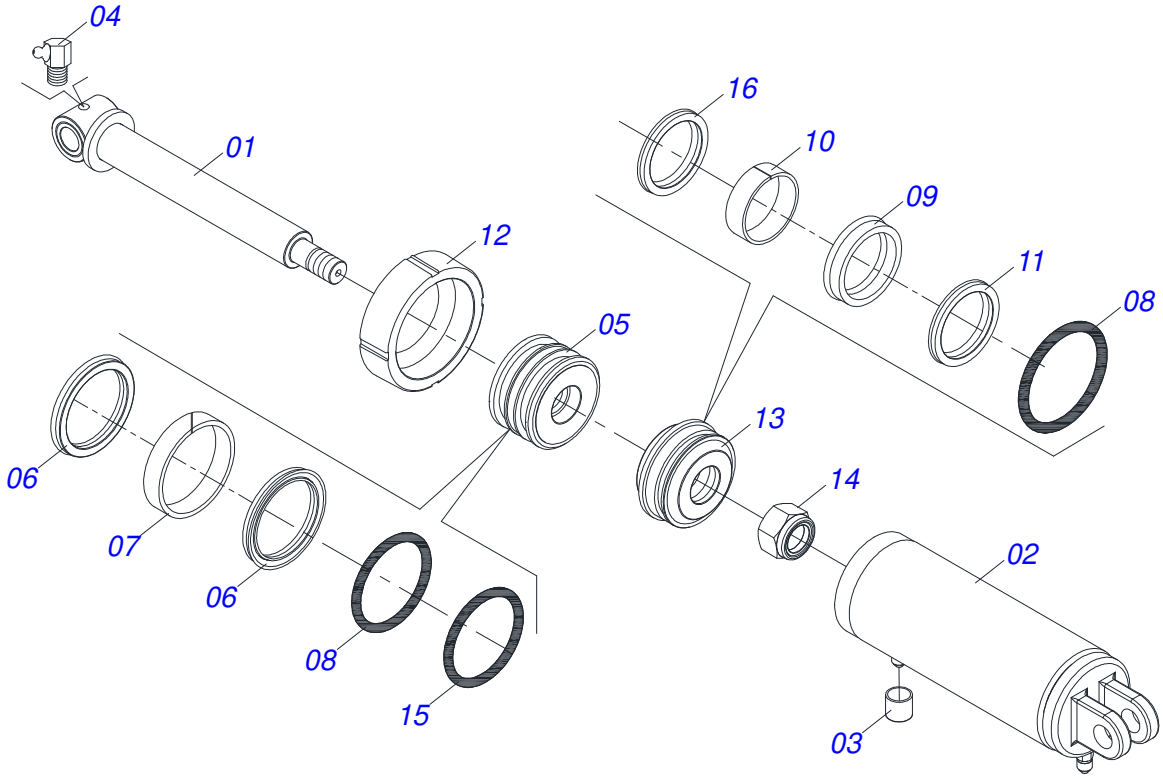

Item	Code	Description	See page	QT
01	0521069306	50.8 X 337.5 EXTENSION WITH 32.5 BUSHING		01
02	0521069305	SHIRT 101.6 X 438.5		01
03	0503030385	CYLINDER PLUG N-002		02
04	0503010004	1890 GREASE FITTING		01
05	0502012821	50.80 X 101.60 RING SUPPORT		01
06	0503011061	8-342 BACK-UP RING		02
07	0503018024	RING BS		01
08	0503010338	2-342 N 3006-9B O'RING		02
09	0503018026	1870-2000-375 B GASKET		01
10	0503018025	RING GUIDE		01
11	0503010039	D-2000 SCRAPER RING		01
12	0502012822	101.60 END CAP		01
13	0502012842	50,80 X 101,60 PISTON		01
14	0503010817	1.1/4" SELF LOCKING NUT		01
15	0503018029	2-217 O'RING		01
16	0503015633	SELEMASTER SEALING		01

HANDRAIL ASSEMBLY - 3245

0511057206

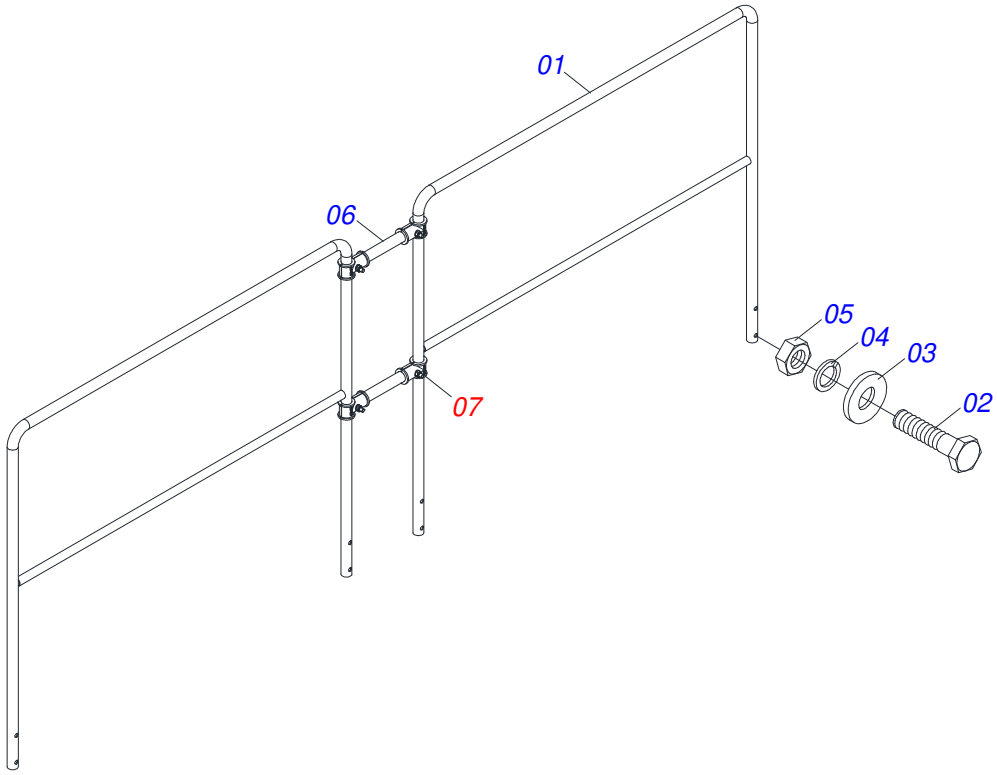

Item	Code	Description	See page	QT
01	0521065948	HANDRAIL FRAME		02
02	0503011172	BOLT 1/2 UNC X 2.1/2 C S G.5 ZN		08
03	0511017302	FLAT WASHER		08
04	0503010019	1/2" SPRING WASHER		08
05	0503010060	1/2" NUT		08
06	0581012916	INTERMEDIATE TUBE		02
07	0511059383	HANDRAIL INTERNAL FIXER	20	04

HANDRAIL ASSEMBLY - 3495

0511057369

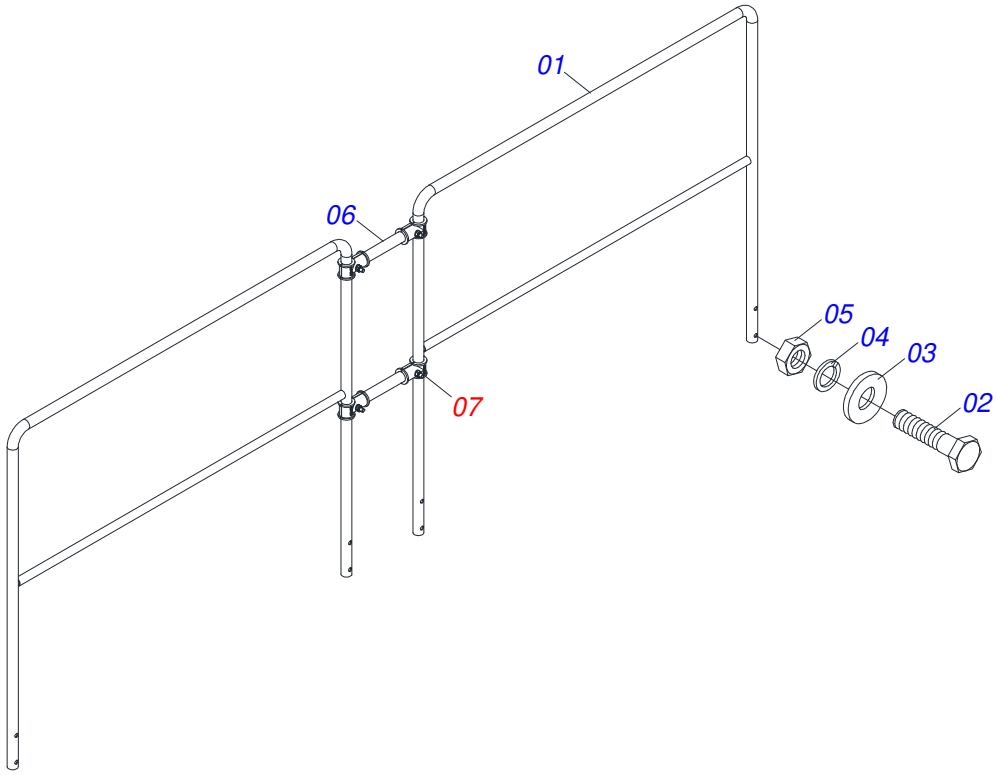

Item	Code	Description	See page	QT
01	0521065949	FRAME HANDRAIL 3495		02
02	0503011172	BOLT 1/2 UNC X 2.1/2 C S G.5 ZN		08
03	0511017302	FLAT WASHER		08
04	0503010019	1/2" SPRING WASHER		08
05	0503010060	1/2" NUT		08
06	0581012916	INTERMEDIATE TUBE		02
07	0511059383	HANDRAIL INTERNAL FIXER	20	04

HANDRAIL ASSEMBLY - 4045

0511057306

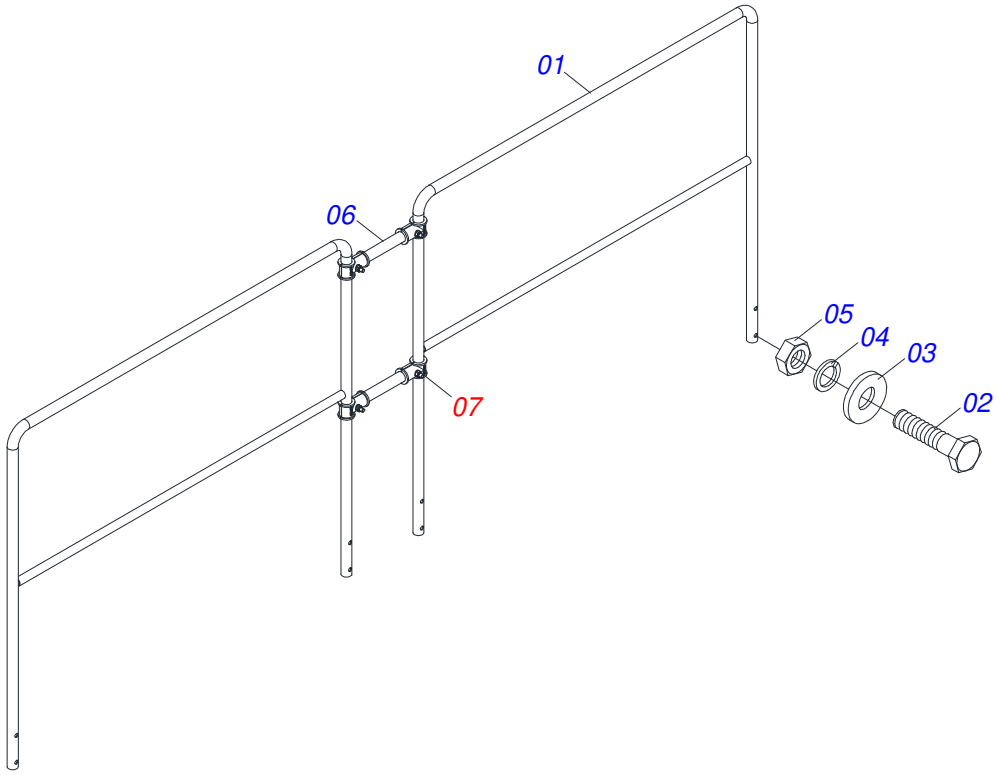

Item	Code	Description	See page	QT
01	0521065950	HANDRAIL		02
02	0503011172	BOLT 1/2 UNC X 2.1/2 C S G.5 ZN		08
03	0511017302	FLAT WASHER		08
04	0503010019	1/2" SPRING WASHER		08
05	0503010060	1/2" NUT		08
06	0581012916	INTERMEDIATE TUBE		02
07	0511059383	HANDRAIL INTERNAL FIXER	20	04

HANDRAIL ASSEMBLY - 4395

0511057359

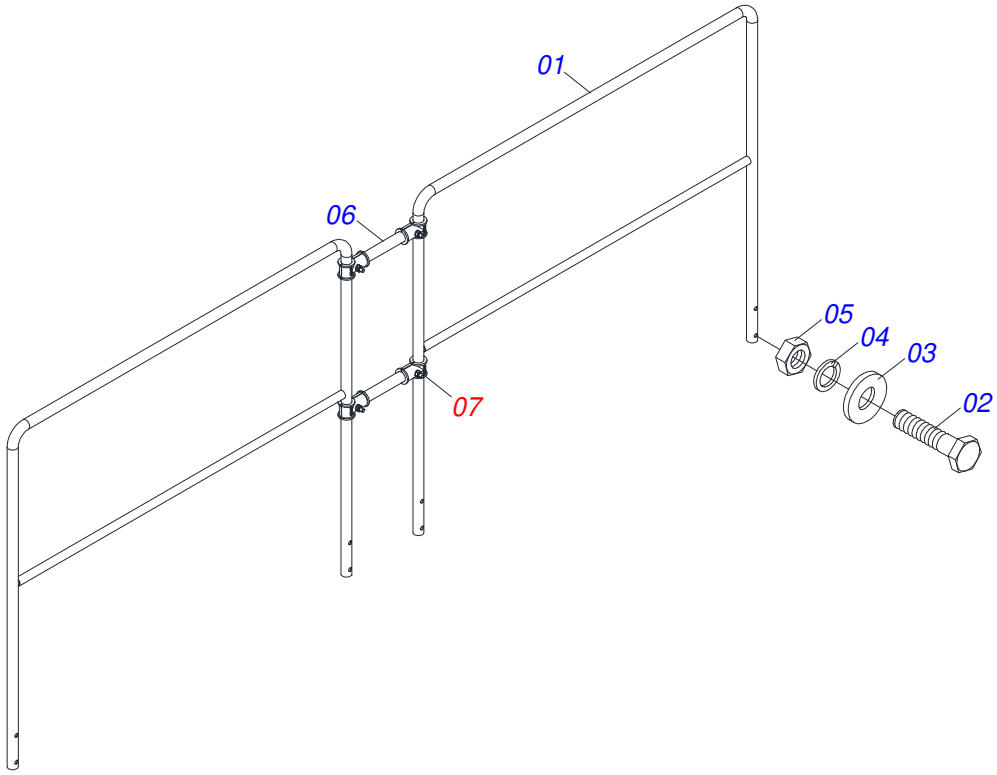

Item	Code	Description	See page	QT
01	0521065951	HANDRAIL 4395		02
02	0503011172	BOLT 1/2 UNC X 2.1/2 C S G.5 ZN		08
03	0511017302	FLAT WASHER		08
04	0503010019	1/2" SPRING WASHER		08
05	0503010060	1/2" NUT		08
06	0581012916	INTERMEDIATE TUBE		02
07	0511059383	HANDRAIL INTERNAL FIXER	20	04

HANDRAIL ASSEMBLY - 4845

0511057330

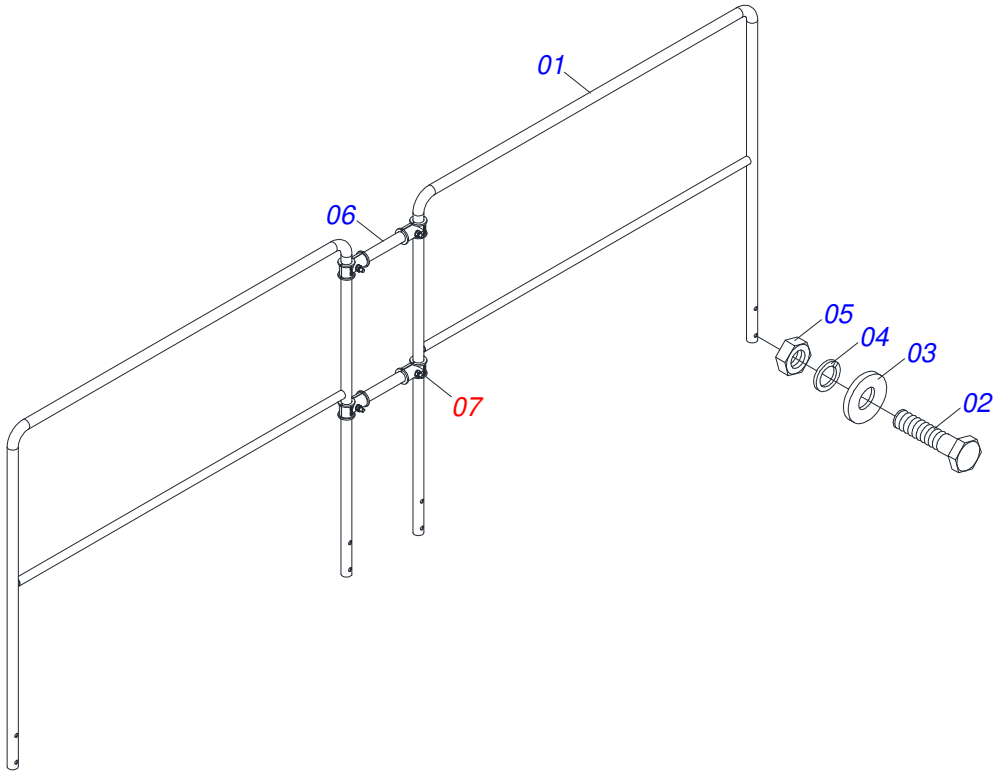

Item	Code	Description	See page	QT
01	0521065952	HANDRAIL FRAME		02
02	0503011172	BOLT 1/2 UNC X 2.1/2 C S G.5 ZN		08
03	0511017302	FLAT WASHER		08
04	0503010019	1/2" SPRING WASHER		08
05	0503010060	1/2" NUT		08
06	0581012916	INTERMEDIATE TUBE		02
07	0511059383	HANDRAIL INTERNAL FIXER	20	04

HANDRAIL ASSEMBLY - 5345

0511057386

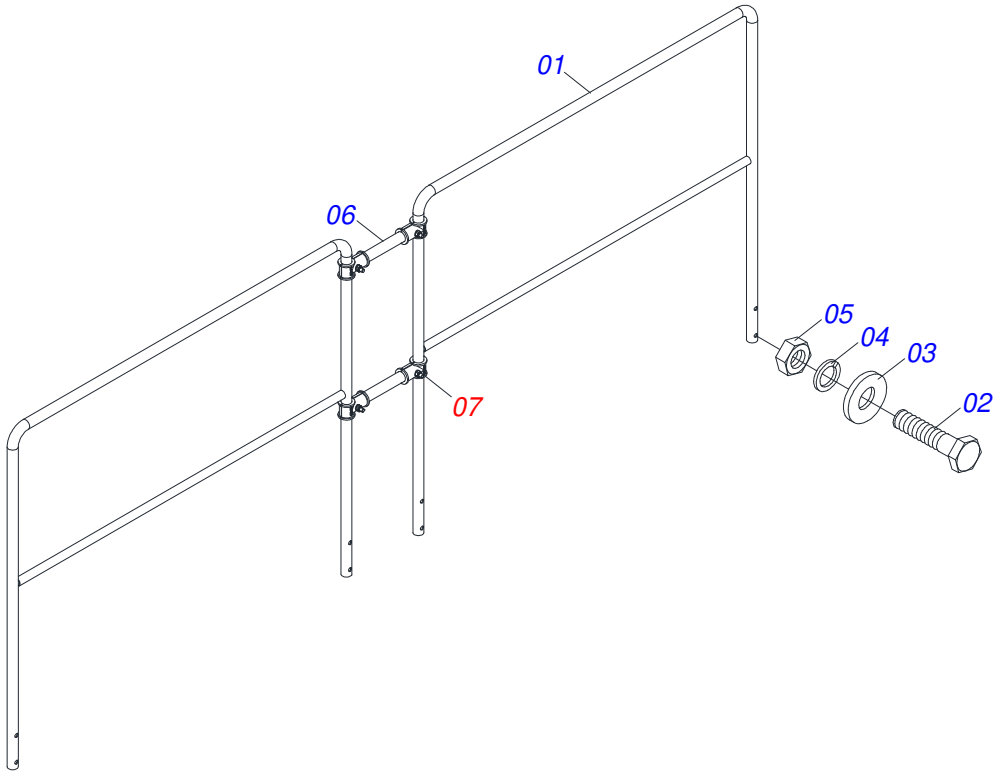

Item	Code	Description	See page	QT
01	0521065953	HANDRAIL FRAME 5345		02
02	0503011172	BOLT 1/2 UNC X 2.1/2 C S G.5 ZN		08
03	0511017302	FLAT WASHER		08
04	0503010019	1/2" SPRING WASHER		08
05	0503010060	1/2" NUT		08
06	0581012916	INTERMEDIATE TUBE		02
07	0511059383	HANDRAIL INTERNAL FIXER	20	04

HANDRAIL ASSEMBLY - 5745

0521050055

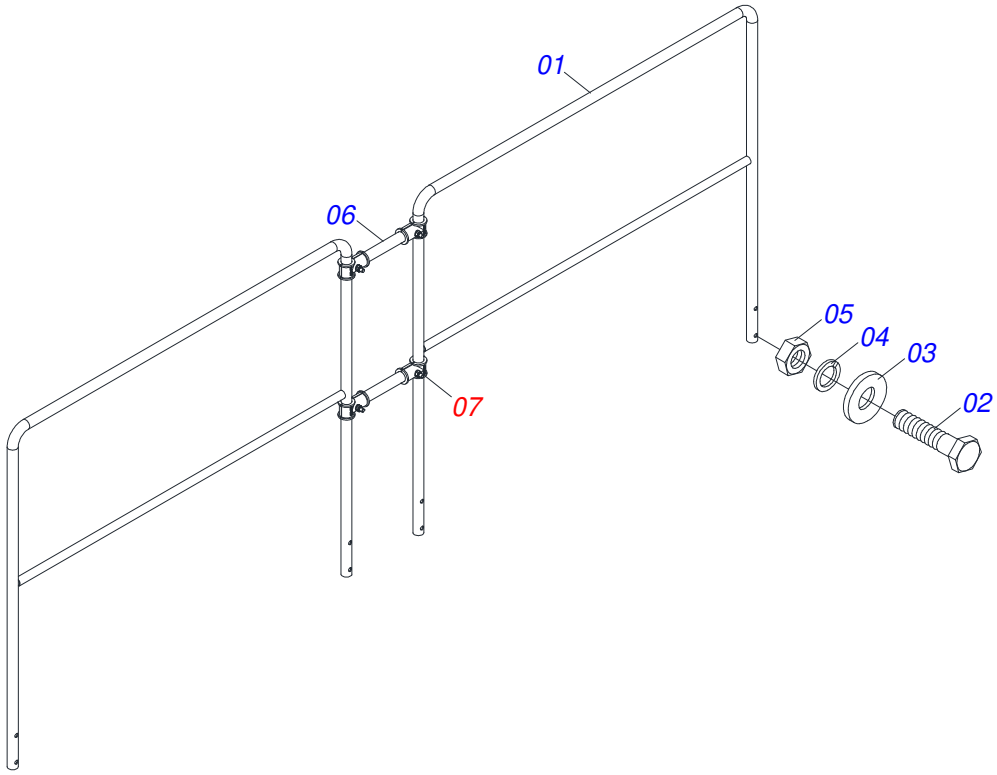

Item	Code	Description	See page	QT
01	0531063064	HANDRAIL FRAME - 5745		02
02	0503011172	BOLT 1/2 UNC X 2.1/2 C S G.5 ZN		08
03	0511017302	FLAT WASHER		08
04	0503010019	1/2" SPRING WASHER		08
05	0503010060	1/2" NUT		08
06	0581012916	INTERMEDIATE TUBE		02
07	0511059383	HANDRAIL INTERNAL FIXER	20	04

HANDRAIL INTERNAL FIXER

0511059383

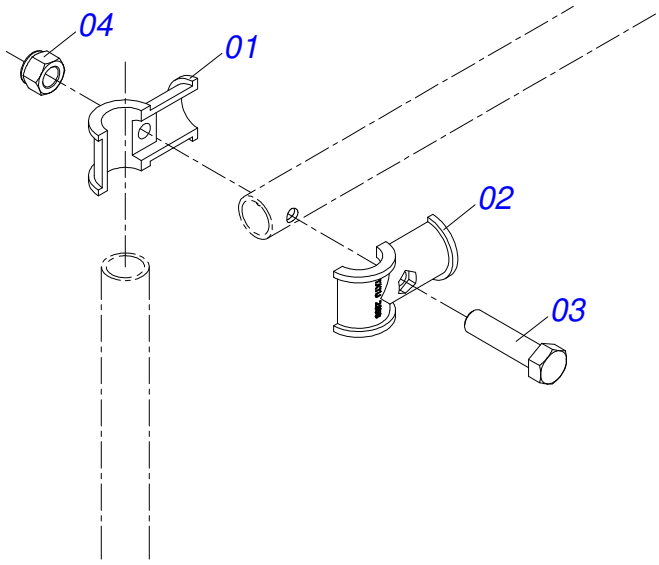

Item	Code	Description	See page	QT
01	0502012857	EXTERNAL FIXER HANDRAIL		01
02	0502012858	INTERNAL FIXER HANDRAIL		01
03	0503019083	7/16 UNC X 2.1/4 C S R P G.5 ZN BOLT		01
04	0503015490	SELF-LOCKING NUT 7/16		01

PLATFORM ASSEMBLY - 3245

0511057205

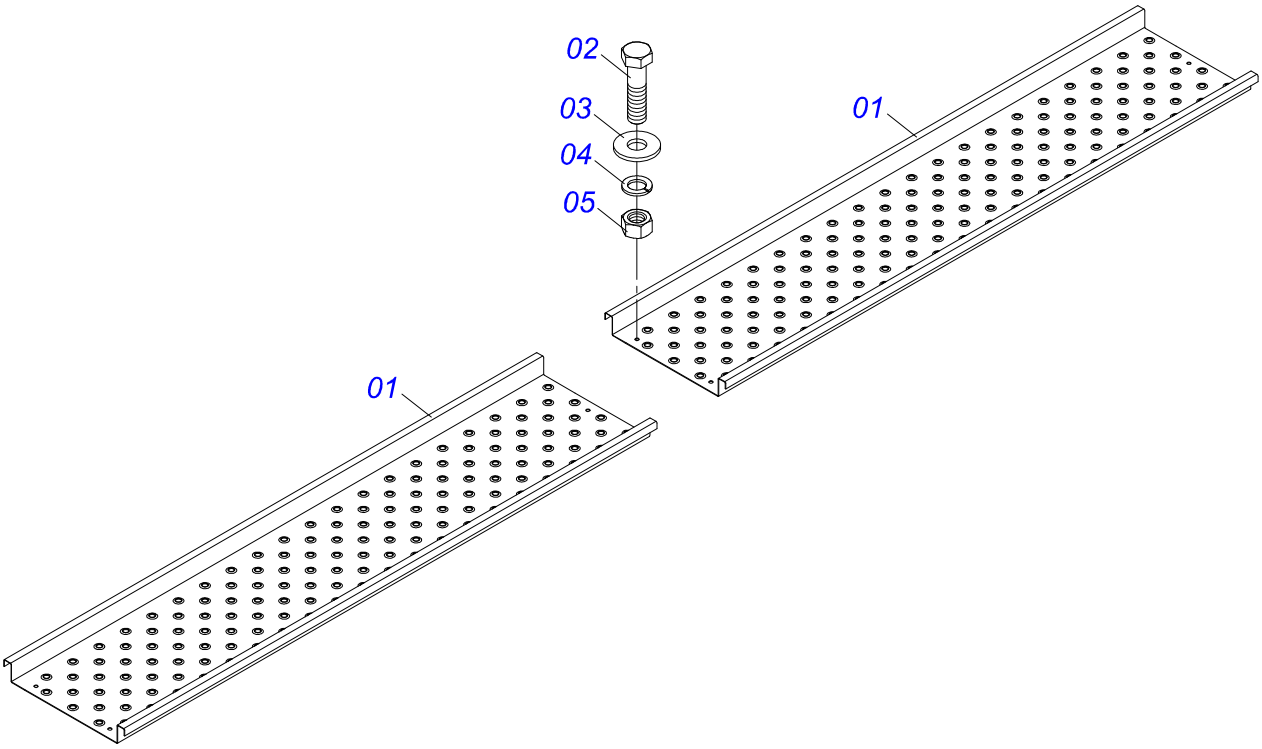

Item	Code	Description	See page	QT
01	0571018864	PLATFORM 3245		02
02	0503010237	3/8" X 1" BOLT		08
03	0501010984	FLAT WASHER		16
04	0503010025	3/8" SPRING WASHER		08
05	0503010026	3/8" NUT		08

PLATFORM ASSEMBLY - 3495

0511057370

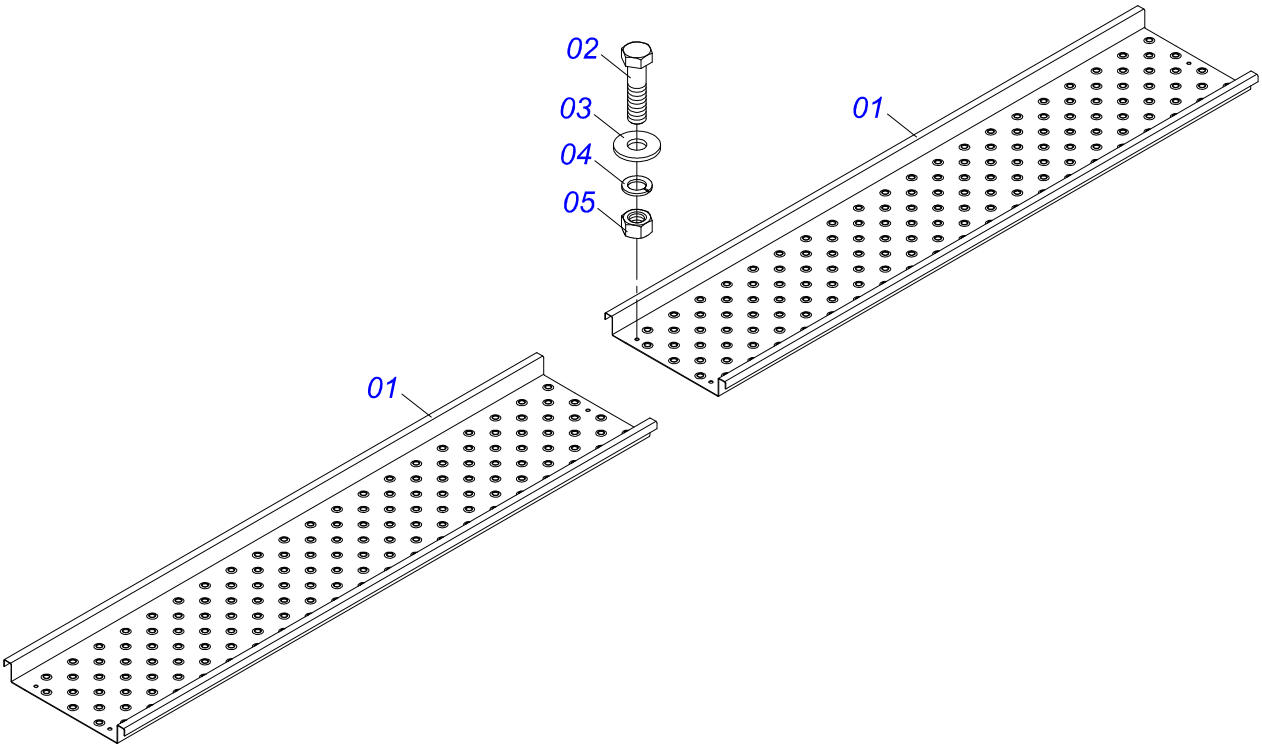

Item	Code	Description	See page	QT
01	0571018865	PLATFORM		02
02	0503010237	3/8" X 1" BOLT		08
03	0501010984	FLAT WASHER		16
04	0503010025	3/8" SPRING WASHER		08
05	0503010026	3/8" NUT		08

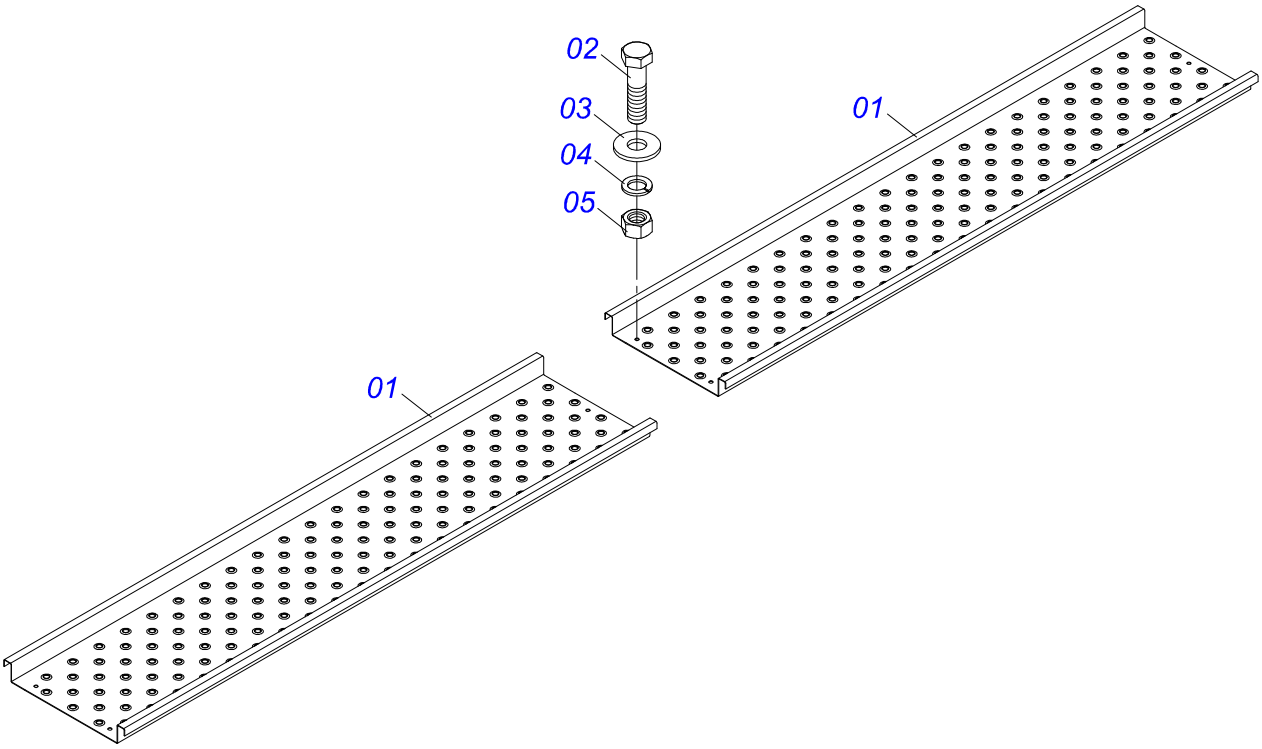

Item	Code	Description	See page	QT
01	0571018866	SET PLATFORM 4045		02
02	0503010237	3/8" X 1" BOLT		08
03	0501010984	FLAT WASHER		16
04	0503010025	3/8" SPRING WASHER		08
05	0503010026	3/8" NUT		08

PLATFORM ASSEMBLY - 4395

0511057358

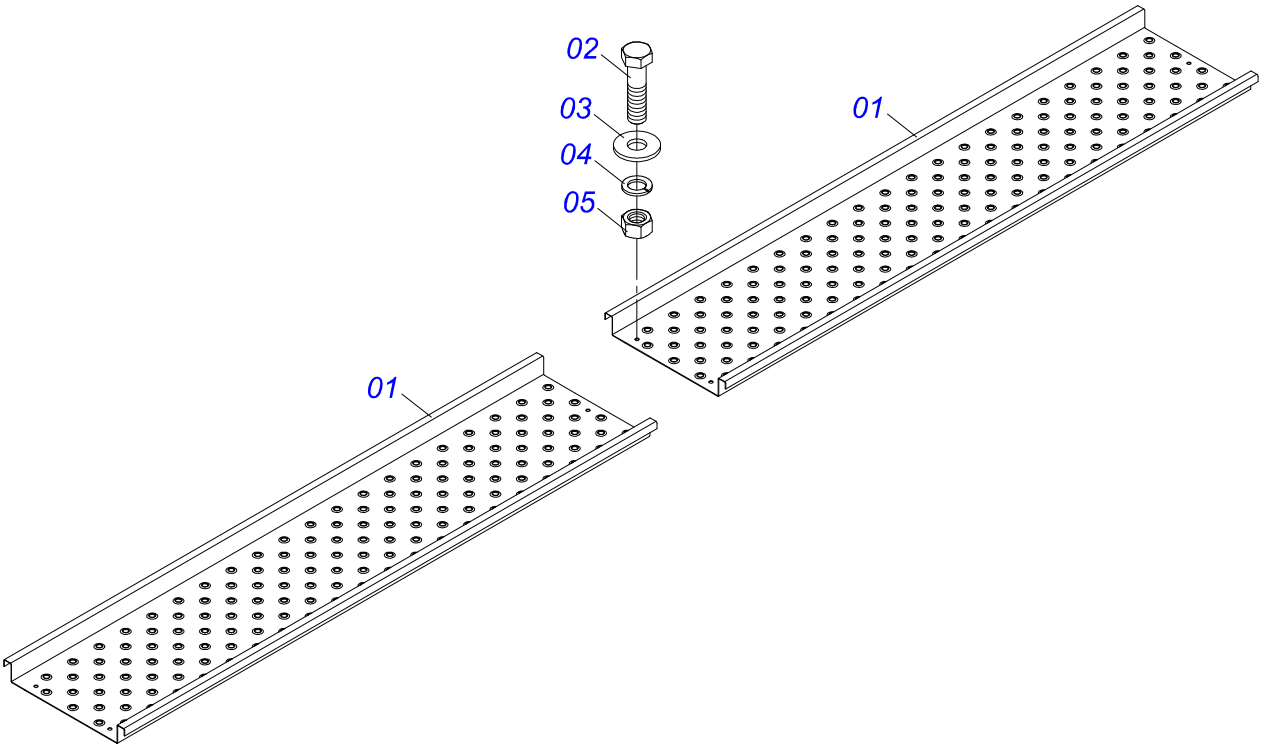

Item	Code	Description	See page	QT
01	0571018867	PLATFORM 4395		02
02	0503010237	3/8" X 1" BOLT		08
03	0501010984	FLAT WASHER		16
04	0503010025	3/8" SPRING WASHER		08
05	0503010026	3/8" NUT		08

PLATFORM ASSEMBLY - 4845

0511057331

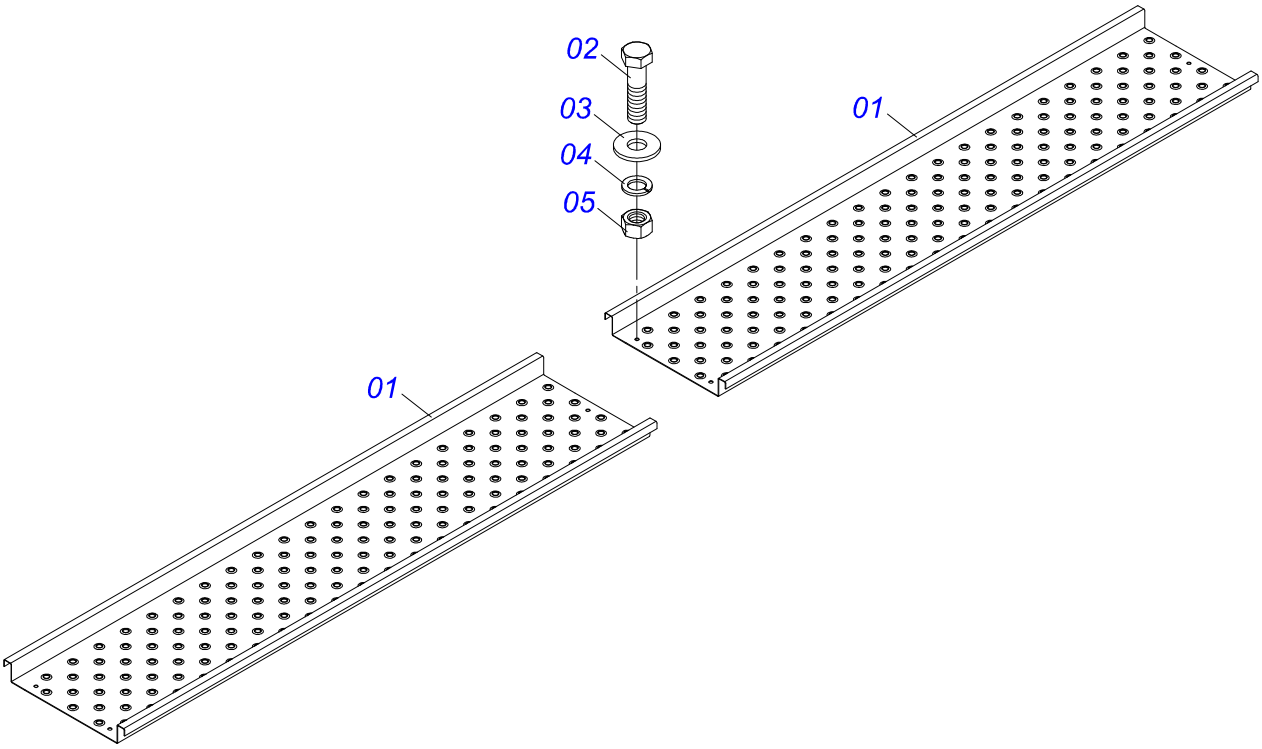

Item	Code	Description	See page	QT
01	0571018868	SET PLATFORM 4845		02
02	0503010237	3/8" X 1" BOLT		08
03	0501010984	FLAT WASHER		16
04	0503010025	3/8" SPRING WASHER		08
05	0503010026	3/8" NUT		08

PLATFORM ASSEMBLY - 5345

0511057385

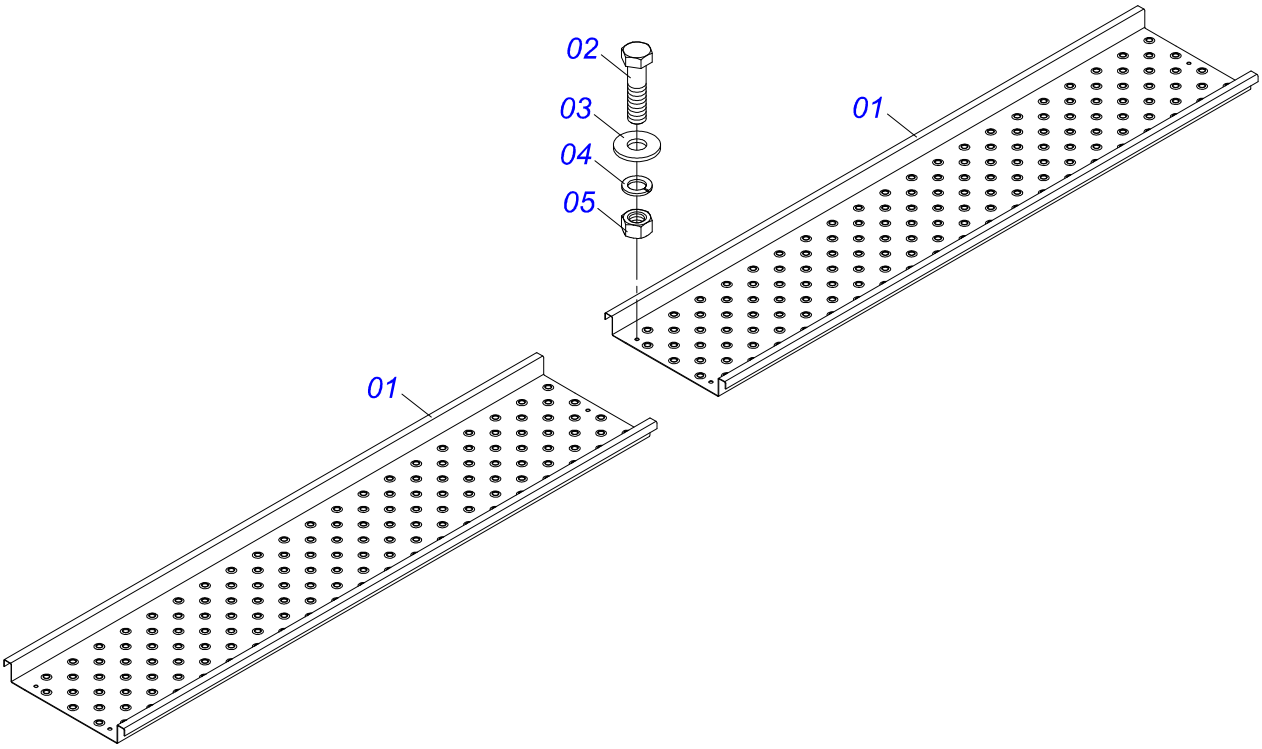

Item	Code	Description	See page	QT
01	0571018869	SET PLATFORM 5345		02
02	0503010237	3/8" X 1" BOLT		08
03	0501010984	FLAT WASHER		16
04	0503010025	3/8" SPRING WASHER		08
05	0503010026	3/8" NUT		08

PLATFORM ASSEMBLY - 5745

0521050048

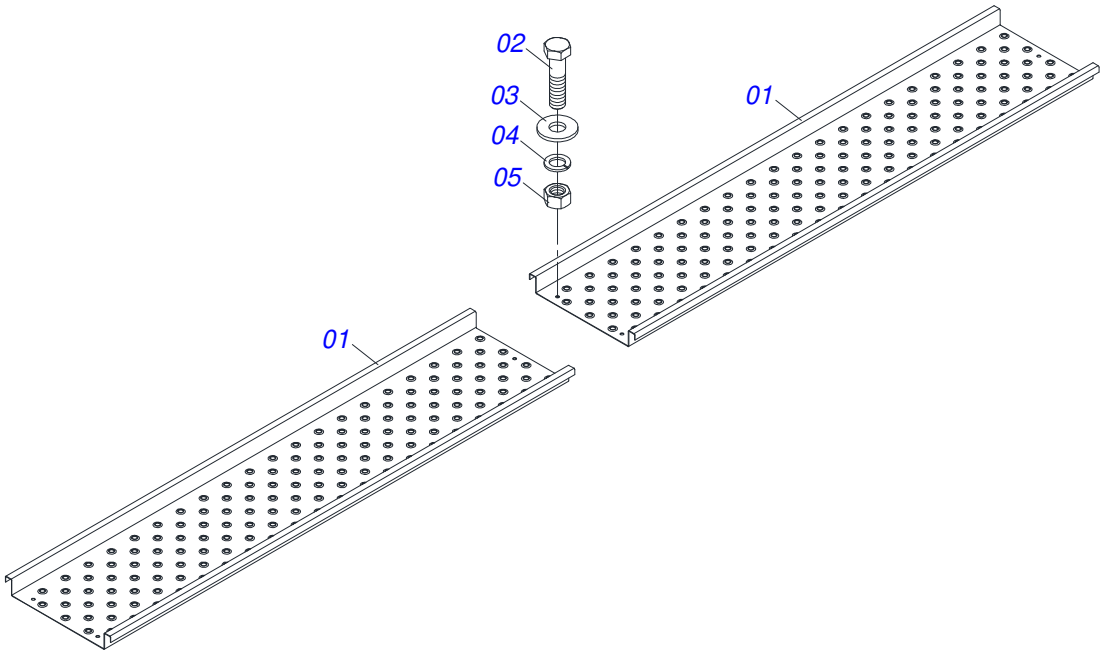

Item	Code	Description	See page	QT
01	0581012899	PLATFORM SET		02
02	0503010237	3/8" X 1" BOLT		06
03	0501010984	FLAT WASHER		12
04	0503010025	3/8" SPRING WASHER		06
05	0503010026	3/8" NUT		06

LADDER ASSEMBLY

0511056536

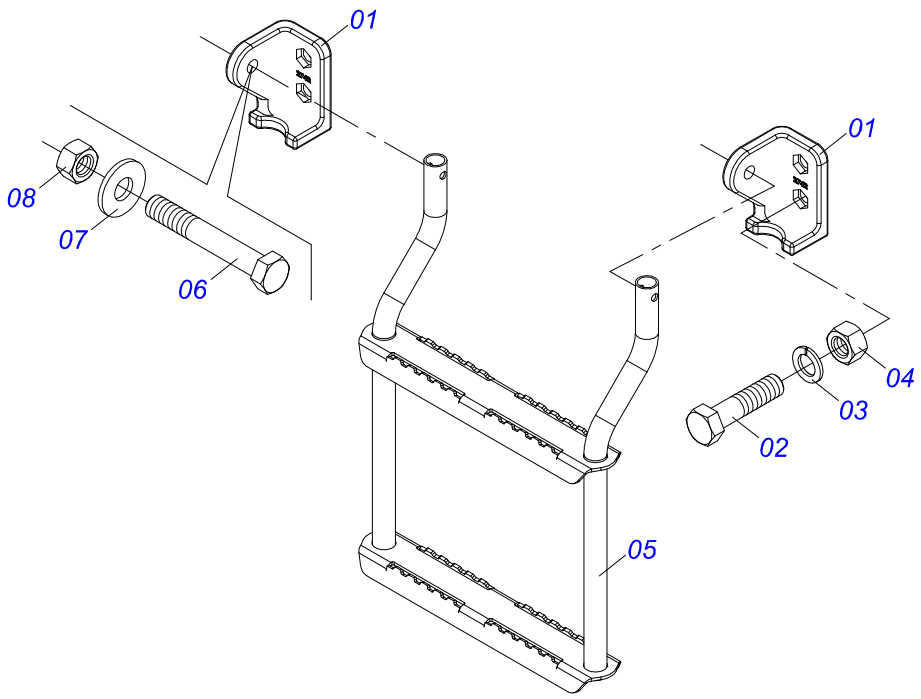

Item	Code	Description	See page	QT
01	0502012742	FIXER SUPPORT LADDER		02
02	0503010237	3/8" X 1" BOLT		04
03	0503010025	3/8" SPRING WASHER		04
04	0503010026	3/8" NUT		04
05	0511069636	LADDER		01
06	0503011179	3/8" X 2-1/4" BOLT		02
07	0501010984	FLAT WASHER		02
08	0503013357	3/8" SELF-ADJUSTING NUT		02

DRAWBAR ASSEMBLY - 3245

0511057229

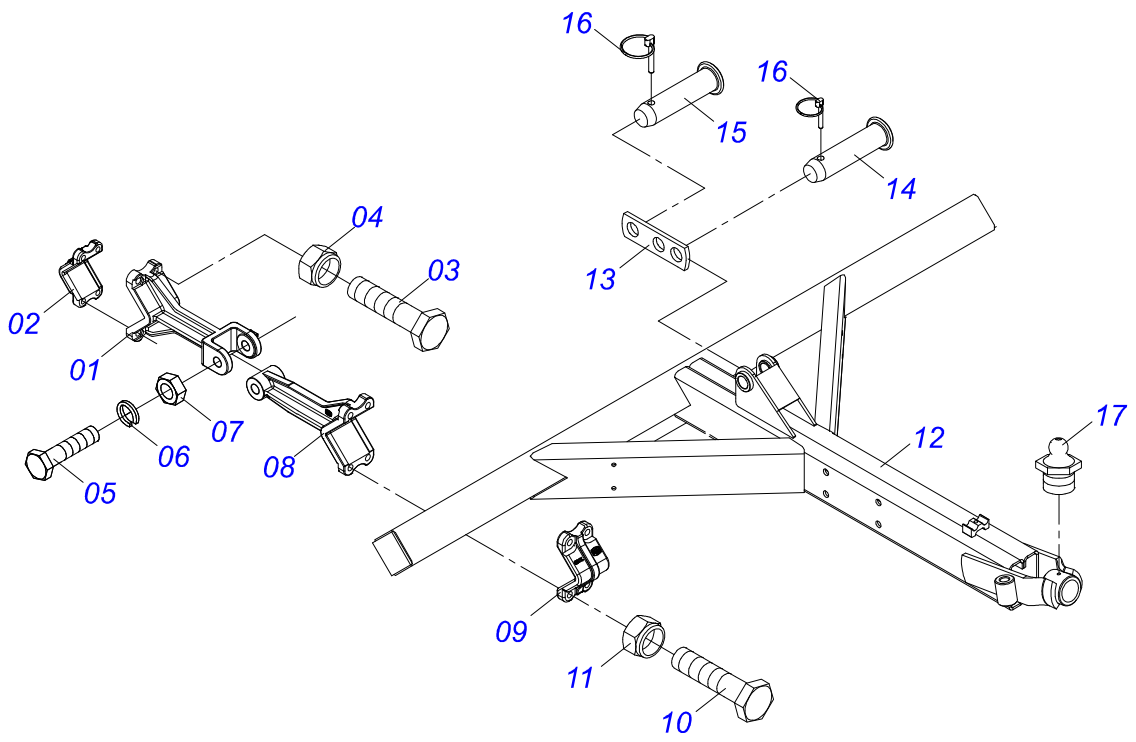

Item	Code	Description	See page	QT
01	0502012806	SUPPORT REAR FIXER DRAWBAR		02
02	0502012789	FIXER SUPPORT FERTILIZER ROW		02
03	0503017960	5/8" X 3-12" BOLT		08
04	0503010811	5/8" UNF SELF ADJUSTING NUT		08
05	0501010191	1" X 6" BOLT		02
06	0503010012	1" SPRING WASHER		02
07	0501010059	1.5/8 NUT		02
08	0502012805	SUPPORT FRONT FIXER DRAWBAR		02
09	0502012789	FIXER SUPPORT FERTILIZER ROW		02
10	0503017960	5/8" X 3-12" BOLT		08
11	0503010811	5/8" UNF SELF ADJUSTING NUT		08
12	0521065958	DRAWBAR		01
13	0561019087	DRAWBAR TRANSPORT LOCK		01
14	0551014099	COUPLING SHAFT 31,75 X 185		01
15	0521010544	1.2" X 4.9" COUPLING SHAFT		01
16	0503030085	LOCK PIN		02
17	0503010002	1800 GREASE FITTING		01

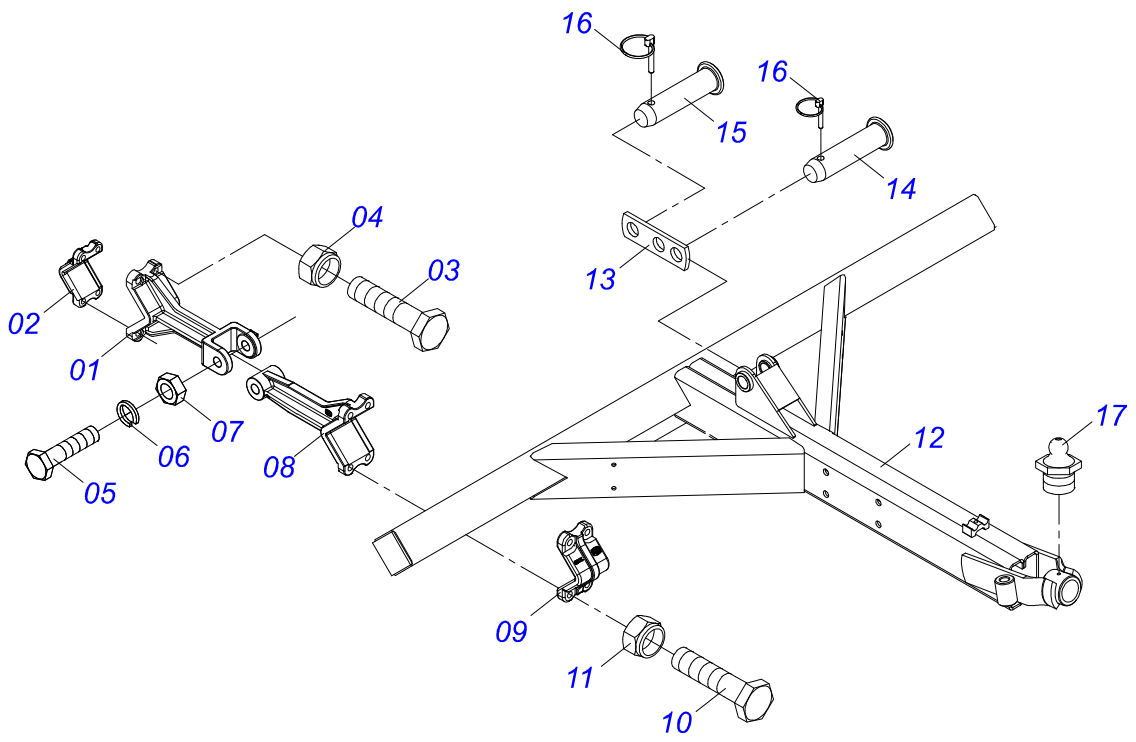

Item	Code	Description	See page	QT
01	0502012806	SUPPORT REAR FIXER DRAWBAR		04
02	0502012789	FIXER SUPPORT FERTILIZER ROW		04
03	0503017960	5/8" X 3-12" BOLT		16
04	0503010811	5/8" UNF SELF ADJUSTING NUT		16
05	0501010191	1" X 6" BOLT		04
06	0503010012	1" SPRING WASHER		04
07	0501010059	1.5/8 NUT		04
08	0502012805	SUPPORT FRONT FIXER DRAWBAR		04
09	0502012789	FIXER SUPPORT FERTILIZER ROW		04
10	0503017960	5/8" X 3-12" BOLT		16
11	0503010811	5/8" UNF SELF ADJUSTING NUT		16
12	0521065958	DRAWBAR		01
13	0561019087	DRAWBAR TRANSPORT LOCK		01
14	0551014099	COUPLING SHAFT 31,75 X 185		01
15	0521010544	1.2" X 4.9" COUPLING SHAFT		01
16	0503030085	LOCK PIN		02
17	0503010002	1800 GREASE FITTING		01

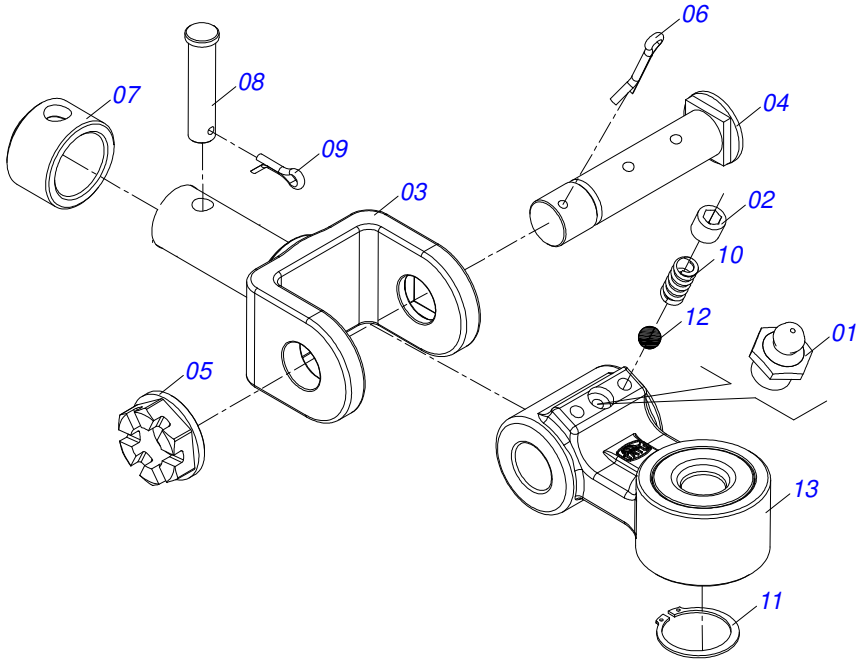

Item	Code	Description	See page	QT
01	0503010002	1800 GREASE FITTING		01
02	0503016482	BOLT		02
03	0502040846	U TRACTOR HITCH		01
04	0581019654	ASSY BOLT		01
05	0501011301	1.1/2 UNC 6FPP 2.5/16 NUT		01
06	0503010010	1/4" X 2.1/2" COTTERPIN		01
07	0521010681	BUSHING COUPLING BODY		01
08	0521010639	COUPLING SHAFT		01
09	0503010571	1/4" X 1.1/2 COTTERPIN		01
10	0503033731	COMPRESSION SPRING LEFT		02
11	0503010396	501060 CLAMPING RING (FOR AXLE)		01
12	0503011331	3/8 BALL		02
13	0501110778	TRACTOR HITCH		01

DRAWBAR EXTENDER

0511057270

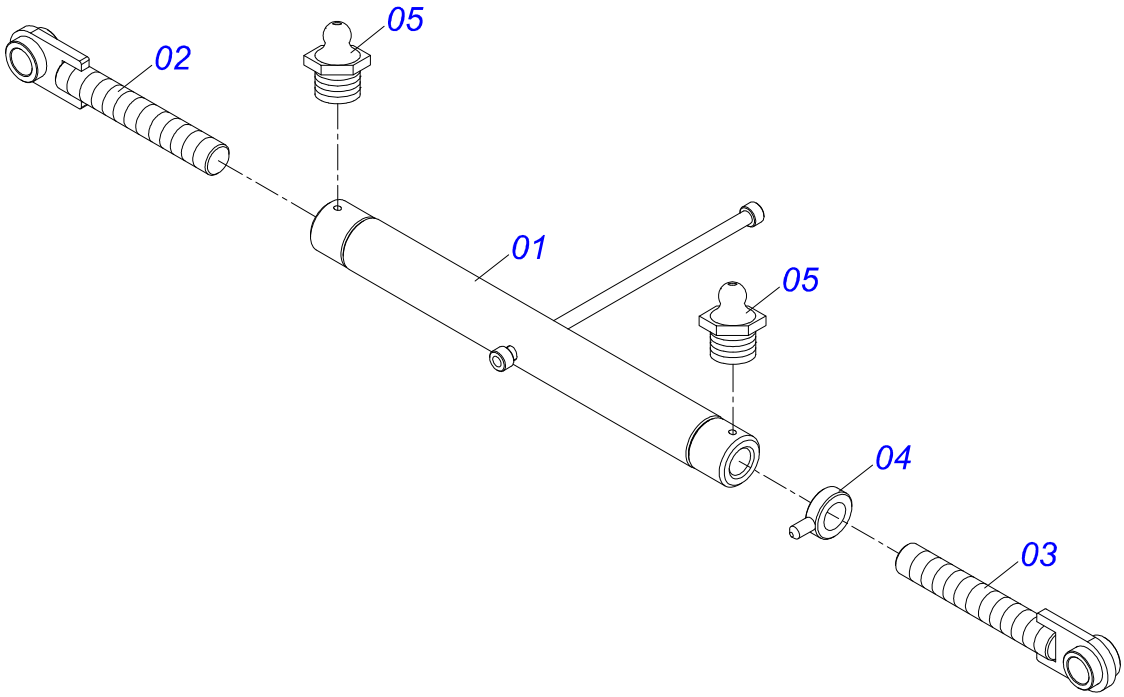

Item	Code	Description	See page	QT
01	0501069529	653 TURNBUCKLE		01
02	0521065959	JACK R.1.1/2 UNC RIGHT X 240		01
03	0521065960	JACK R.1.1/2 UNC LEFT X 240		01
04	0501061056	RH LOCKNUT WITH HANDLER		01
05	0503010002	1800 GREASE FITTING		02

HOSE SUPPORT

0511056736

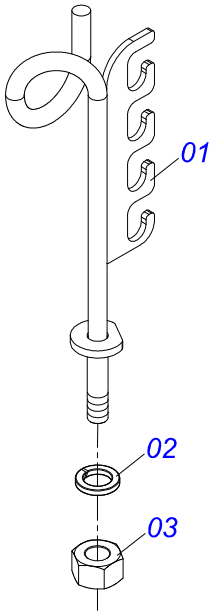

Item	Code	Description	See page	QT
01	0521065611	HOSE SUPPORT		01
02	0503010023	3/4" SPRING WASHER		01
03	0503010014	3/4" NUT		01

JACK ASSEMBLY

0511054971

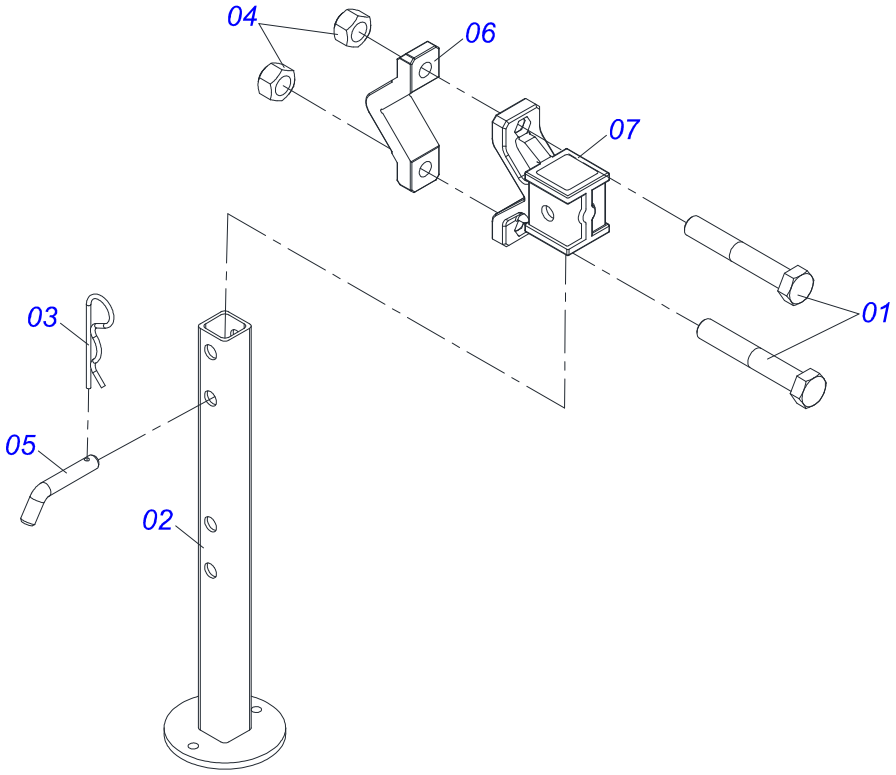

Item	Code	Description	See page	QT
01	0501011543	5/8" X 4" BOLT		02
02	0511061835	PLOUGH SUPPORT		01
03	0503030012	HITCH PIN CLIP		01
04	0503012412	5/8 UNC SELF LOCKING NUT		02
05	0501011075	PIN		01
06	0502010175	HITCH CLAMP		01
07	0502011530	SUPPORT		01

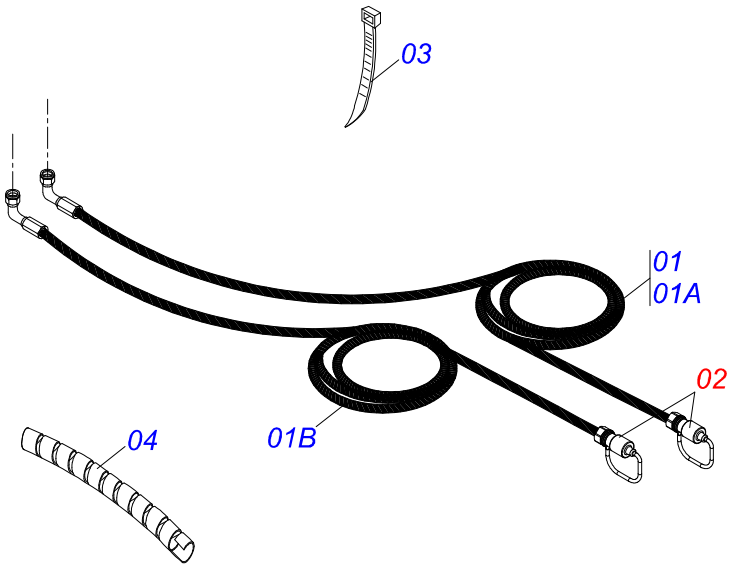

Item	Code	Description	See page	QT
01	0511057267	HOSE KIT HYDRAULIC		01
01A	0501080722	3/8 X 3300 TC-TM HOSE ASSY		01
01B	0501082023	HOSE 3/8 X 3600 TC-TM		01
02	0501053834	MALE QUICK COUPLER	107	02
03	0503013100	NYLON CLAMP		02
04	0571017774	SPRING PROTECTION QUICK HOSE		01

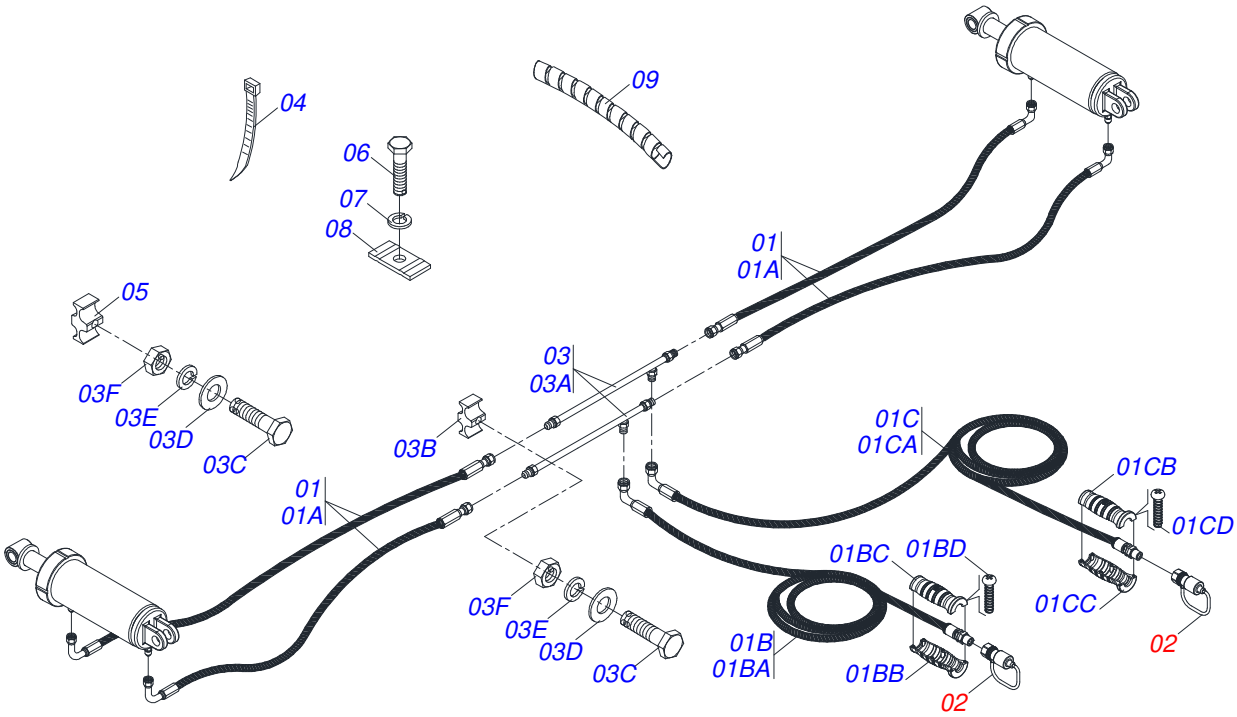

Item	Code	Description	See page	QT
01	0511057335	HOSE KIT HYDRAULIC		01
01A	0501080025	3/8 X 1400 TR-TC HOSE		04
01B	0521052285	TC-TM HOSE ASSY		01
01BA	0501080422	HOSE 3/8 X 4000 TC-TM		01
01BB	0503034492	HYDRAULIC HOSE GRIP (BLACK)		01
01BC	0503034495	HYDRAULIC HOSE GRIP (RED)		01
01BD	0503018952	PLASTIC BOLT		06
01C	0521052330	HOSE 3/8 X 4000 TC-TM PRET/AZUL		01
01CA	0501080422	HOSE 3/8 X 4000 TC-TM		01
01CB	0503034492	HYDRAULIC HOSE GRIP (BLACK)		01
01CC	0503034494	HYDRAULIC HOSE GRIP (BLUE)		01
01CD	0503018952	PLASTIC BOLT		06
02	0501053834	MALE QUICK COUPLER	107	02
03	0511058120	KIT VALVE SUPPORT		01
03A	0521066354	OIL DISTRIBUTOR BODY		02
03B	0502010477	HOSE CLAMP		04
03C	0503011268	3/8" X 2-1/2" BOLT		02
03D	0501010984	FLAT WASHER		04
03E	0503010025	3/8" SPRING WASHER		02
03F	0503010026	3/8" NUT		02
04	0503013100	NYLON CLAMP		02
05	0502012702	BODY SUPPORT CLAMP		04
06	0503012555	SCREW 7/16 UNC X 2 CS RT G.7 ZN		04
07	0503010180	7/16" SPRING WASHER		04
08	0531011180	UPPER BODY CLIP		04
09	0571017774	SPRING PROTECTION QUICK HOSE		01

WHEELS WITH TRACTION SPRING

0511058653

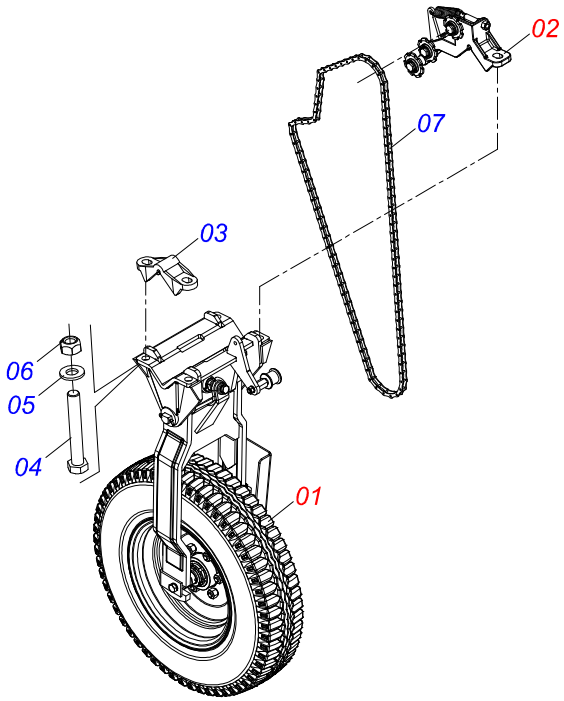

Item	Code	Description	See page	QT
01	0511058654	WHEEL SUPPORT	38	01
02	0501058240	WHEEL FASTENER WITH TENSIONER	43	01
03	0502010584	CARRYING-WHEELS SUPPORT FIXER		01
04	0503011119	7/8" X 6" BOLT		04
05	0501014251	FLAT WASHER		04
06	0503011254	7/8" HEX SELF ADJUSTING NUT		04
07	0503012766	2050 CHAIN X 85 LINK + MENDING		01

WHEEL SUPPORT

0511058654

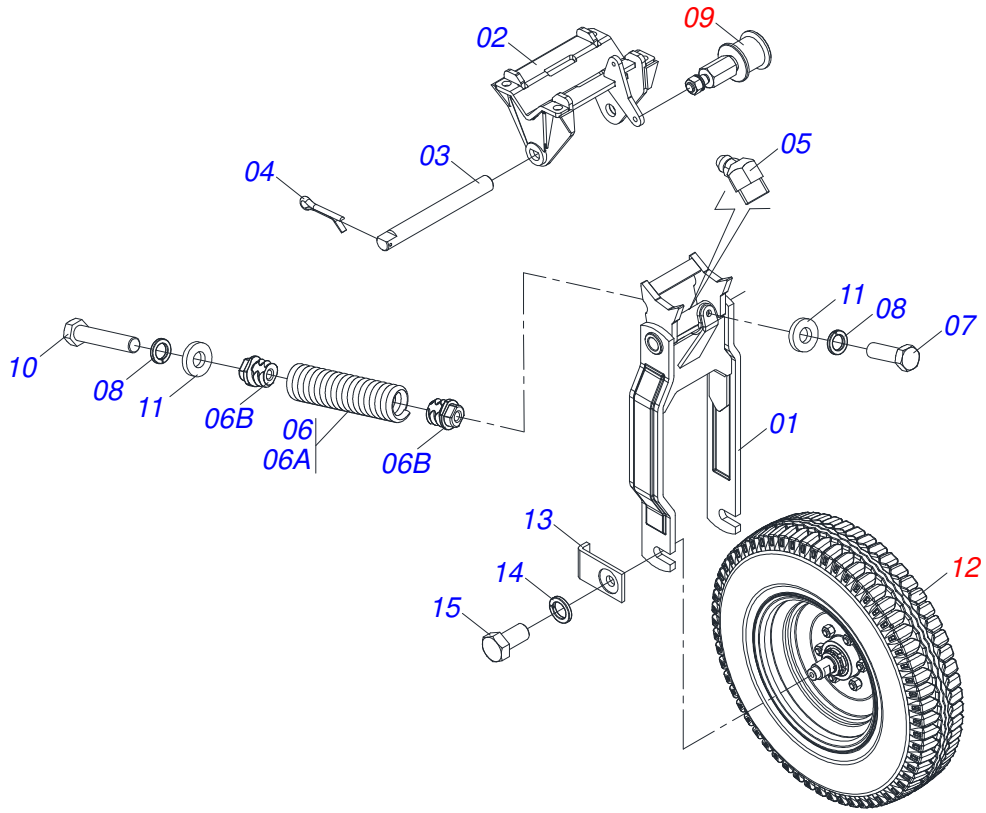

Item	Code	Description	See page	QT
01	0521066716	WHEEL ARM ASSY		01
02	0521061567	CARRYING WHEEL SPRING TRACTION SUPPORT		01
03	0531016887	CARRYING WHEEL AXLE ARM		01
04	0503010523	1/4" X 2" COTTERPIN		01
05	0503010003	1845 GREASE FITTING		01
06	0511050681	TRACTION SPRING		01
06A	0503031681	2.1" X 7.78" EXTENSION SPRING		01
06B	0561016062	SPRING HITCH		02
07	0501010100	SCREW 5/8 UNC X 2 CS G.5 ZN		01
08	0503010027	5/8" SPRING WASHER		01
09	0501058241	WHEEL SUPPORT CHAIN TENSIONER	42	01
10	0503013030	5/8" X 3.1/4" BOLT		01
11	0551017715	FLAT WASHER		02
12	0511052770	WHEEL WITH TIRE	39	01
13	0591010589	BODY LOCK WHEEL		01
14	0503010027	5/8" SPRING WASHER		02
15	0503011167	M16 X 2 X 30 BOLT		02

WHEEL WITH TIRE

0511052770

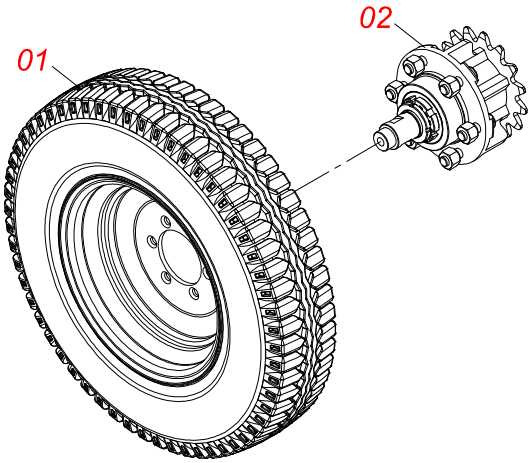

Item	Code	Description	See page	QT
01	0503062159	WHEEL WITH TIRE	41	01
02	0511052769	WHEEL WITH TRANSMISSION WITHOUT TIRE	40	01

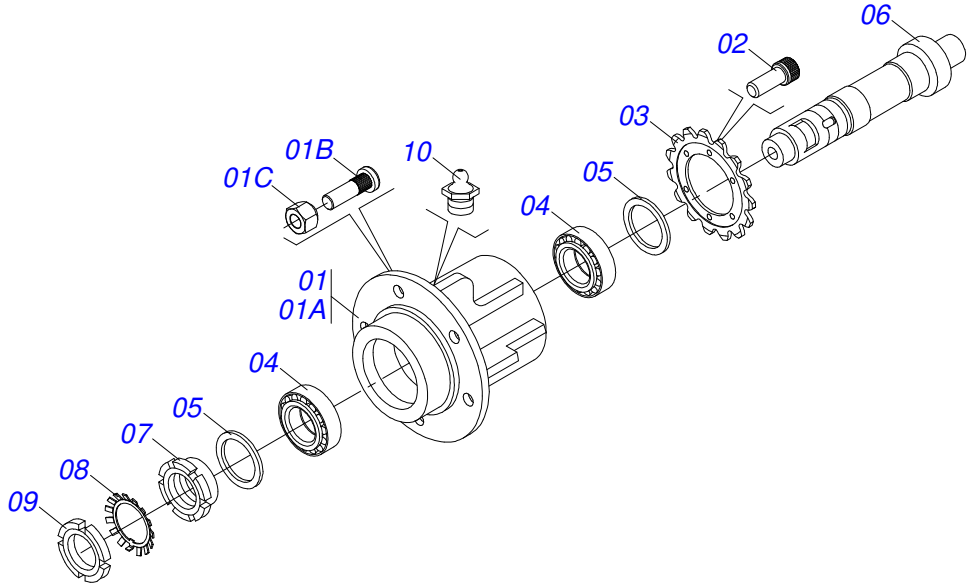

Item	Code	Description	See page	QT
01	0501110721	WHEEL HUB WITH SCREW / NUTS		01
01A	0571012990	CARRYING WHEEL HUB TRANSMISSION		01
01B	0501010186	WHEEL SCREW 5/8UNF X 2.1/8CR		06
01C	0503016516	5/8 UNF CONIC NUT		06
02	0503012550	5/16" X 3/4" BOLT		06
03	0502011339	15Z GEAR P 1.25"		01
04	0503010328	25590/25523 ROLLER BEARING		02
05	0503010804	00547-B SEAL		02
06	0521012185	TRANSMISSION WHEEL AXLE		01
07	0511015949	LOCK NUT		01
08	0503010329	LOCK WASHER		01
09	0503010330	KM 9 LOCKNUT		01
10	0503010002	1800 GREASE FITTING		01

WHEEL WITH TIRE

0503062159

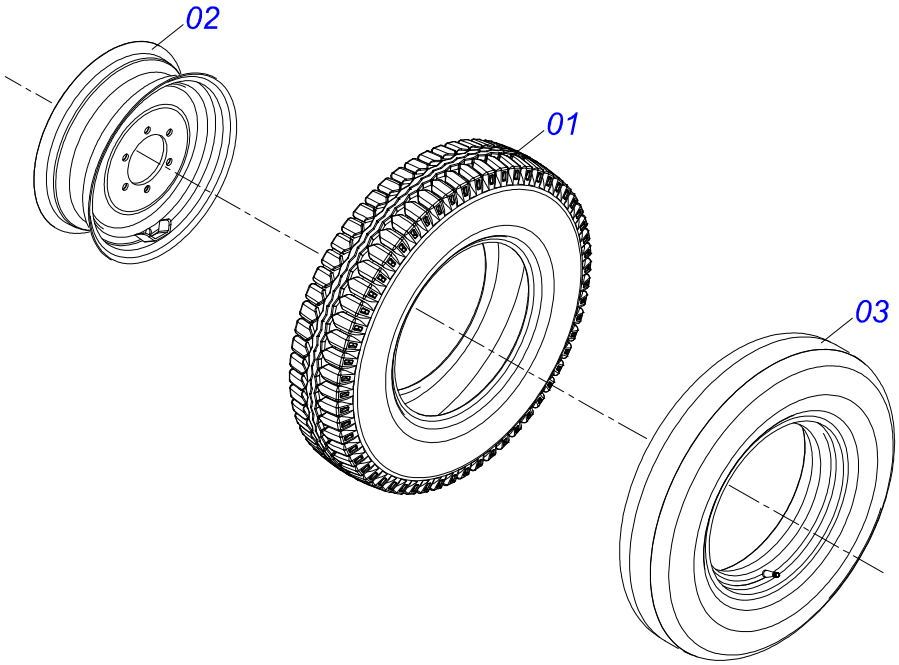

Item	Code	Description	See page	QT
01	0503012113	PLY TIRE		01
02	0503016517	WHEEL EI		01
03	0503010033	7.50 X 16 INNER TIRE		01

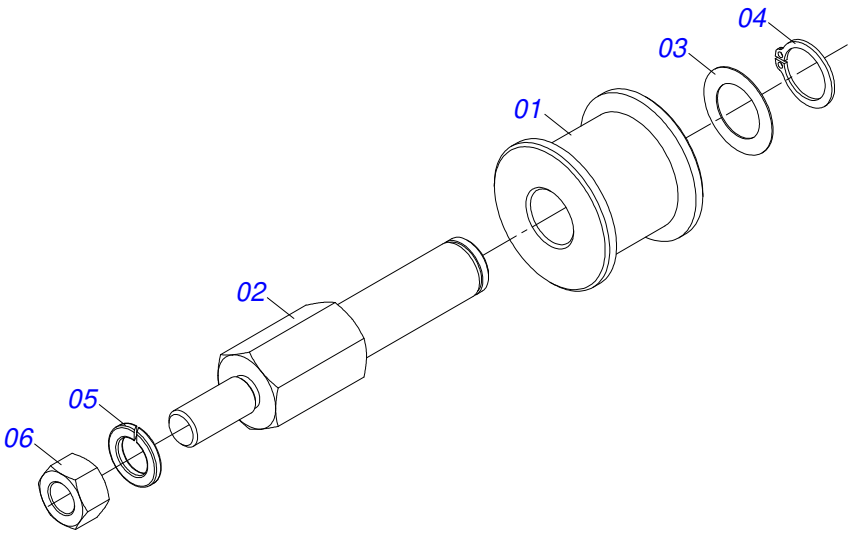

Item	Code	Description	See page	QT
01	0541016454	PULLEY		01
02	0521018933	FERT CHAIN TENSIONER AXLE		01
03	0511015098	FLAT WASHER		01
04	0503010302	501019 SEAL RING		01
05	0503010019	1/2" SPRING WASHER		01
06	0503010060	1/2" NUT		01

WHEEL FASTENER WITH TENSIONER

0501058240

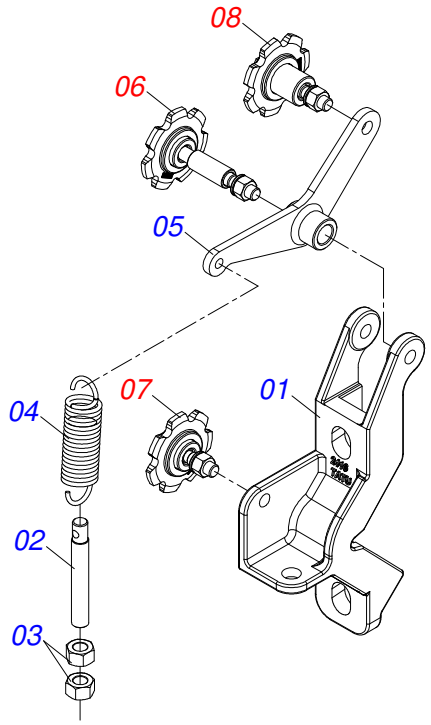

Item	Code	Description	See page	QT
01	0502012416	CARRYING-WHEELS SUPPORT FIXER		01
02	0501013491	5/8" TENSIONER SPRING		01
03	0503010013	5/8" NUT		02
04	0503030099	1.3" X 4.9" 0.2" TRACTION SPRING		01
05	0511069417	REAR TENSIONER		01
06	0501058243	INTERMEDIATE WHEEL CHAIN TENSIONER	45	01
07	0501058244	WHEEL FIXED CHAIN TENSIONER	46	01
08	0501058242	WHEEL MOBILE CHAIN TENSIONER	44	01

WHEEL MOBILE CHAIN TENSIONER

0501058242

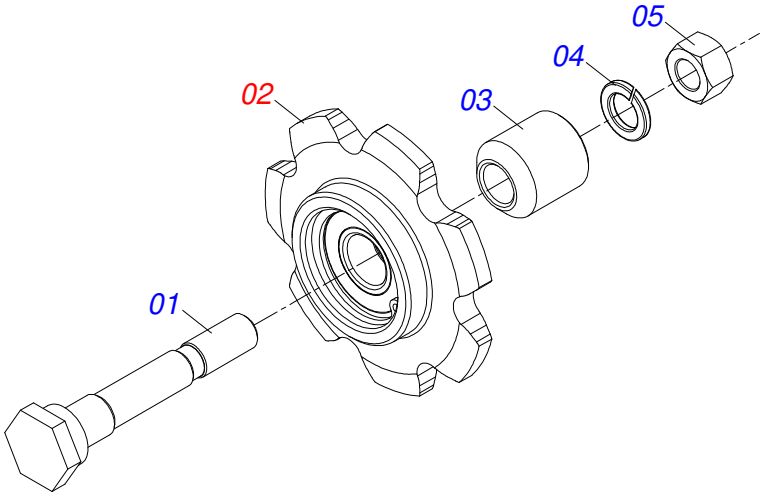

Item	Code	Description	See page	QT
01	0551018244	CHAIN UPPER AXLE		01
02	0501058239	WHEEL CHAIN TENSIONER BEARING	47	01
03	0591017923	15,30 X 30 X 32 SLEEVE		01
04	0503010019	1/2" SPRING WASHER		01
05	0503010060	1/2" NUT		01

INTERMEDIATE WHEEL CHAIN TENSIONER

0501058243

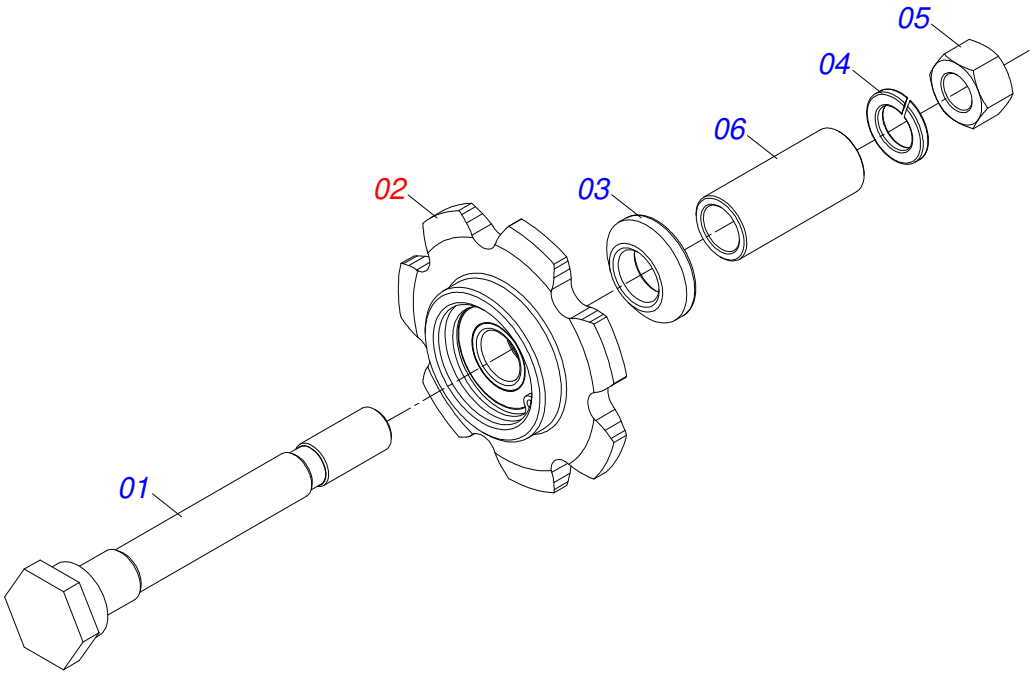

Item	Code	Description	See page	QT
01	0551018245	CHAIN TENSIONER AXLE		01
02	0501058239	WHEEL CHAIN TENSIONER BEARING	47	01
03	0551018241	SLEEVE 16,30 X 30 X 8		01
04	0503010019	1/2" SPRING WASHER		01
05	0503010060	1/2" NUT		01
06	0551018239	SLEEVE 19 X 13,50 X 45		01

WHEEL FIXED CHAIN TENSIONER

0501058244

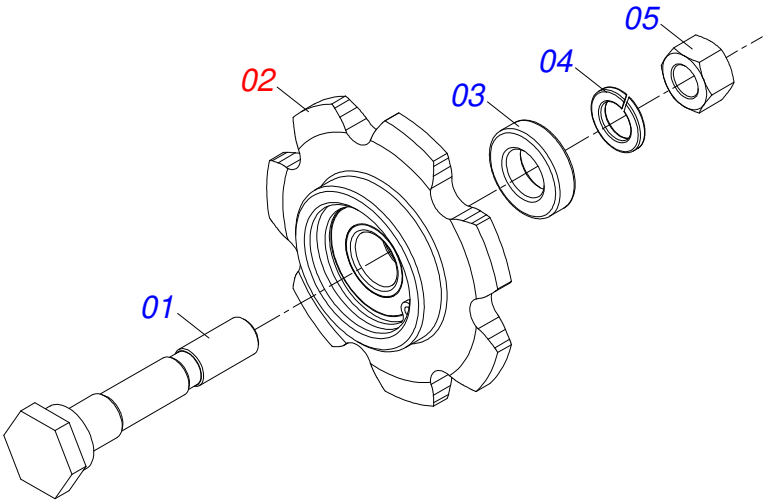

Item	Code	Description	See page	QT
01	0551018252	CHAIN TIGHTENER AXLE		01
02	0501058239	WHEEL CHAIN TENSIONER BEARING	47	01
03	0551018241	SLEEVE 16,30 X 30 X 8		01
04	0503010019	1/2" SPRING WASHER		01
05	0503010060	1/2" NUT		01

WHEEL CHAIN TENSIONER BEARING

0501058239

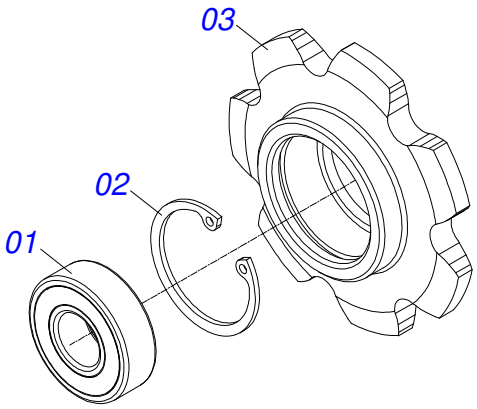

Item	Code	Description	See page	QT
01	0503012882	BEARING		01
02	0503011945	503050 CLAMPING RING (FOR AXLE)		01
03	0502012853	GEAR		01

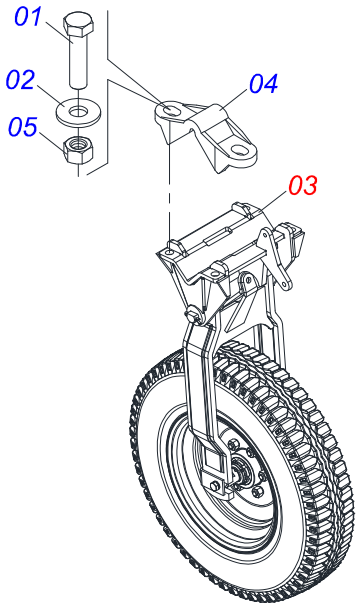

Item	Code	Description	See page	QT
01	0503011119	7/8" X 6" BOLT		04
02	0501014251	FLAT WASHER		04
03	0521050053	WHEEL SUPPORT WITHOUT TRANSMISSION	49	01
04	0502010584	CARRYING-WHEELS SUPPORT FIXER		02
05	0503011254	7/8" HEX SELF ADJUSTING NUT		04

WHEEL SUPPORT WITHOUT TRANSMISSION

0521050053

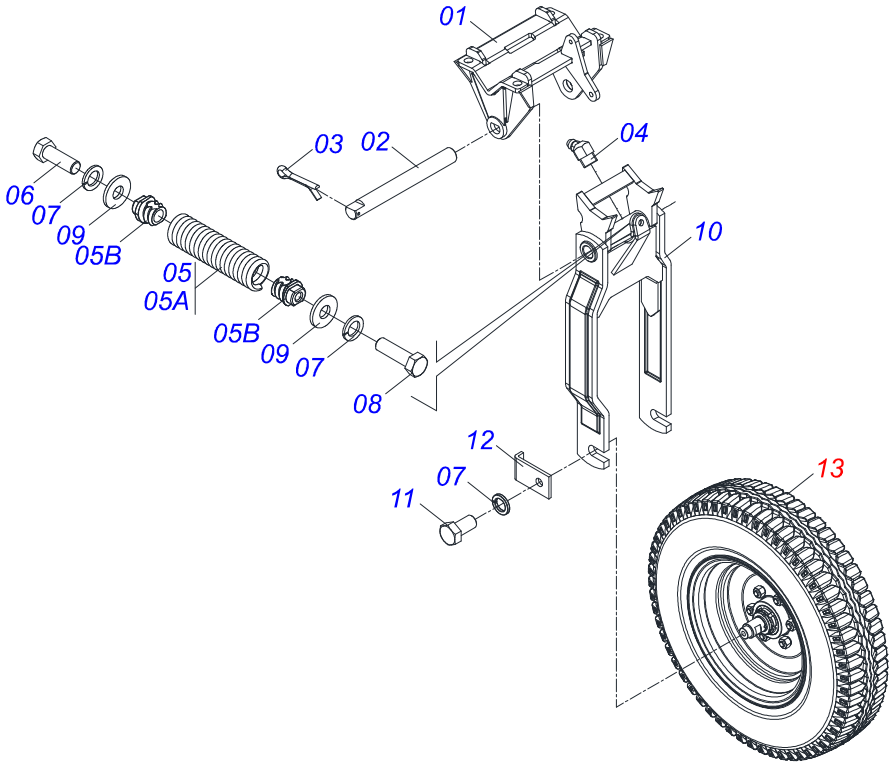

Item	Code	Description	See page	QT
01	0521061567	CARRYING WHEEL SPRING TRACTION SUPPORT		01
02	0531016887	CARRYING WHEEL AXLE ARM		01
03	0503010523	1/4" X 2" COTTERPIN		01
04	0503010003	1845 GREASE FITTING		01
05	0511050681	TRACTION SPRING		01
05A	0503031681	2.1" X 7.78" EXTENSION SPRING		01
05B	0561016062	SPRING HITCH		02
06	0501010100	SCREW 5/8 UNC X 2 CS G.5 ZN		01
07	0503010027	5/8" SPRING WASHER		04
08	0503013030	5/8" X 3.1/4" BOLT		01
09	0551017715	FLAT WASHER		02
10	0521066716	WHEEL ARM ASSY		01
11	0503011167	M16 X 2 X 30 BOLT		02
12	0591010589	BODY LOCK WHEEL		02
13	0521055239	WHEEL WITH TIRE WITHOUT TRANSMISSION	50	01

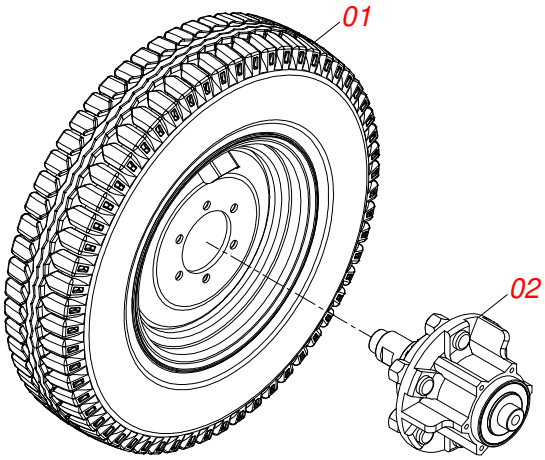

Item	Code	Description	See page	QT
01	0503062159	WHEEL WITH TIRE	41	01
02	0521055244	WHEEL WITHOUT TRANSMISSION WITHOUT TIRE	51	01

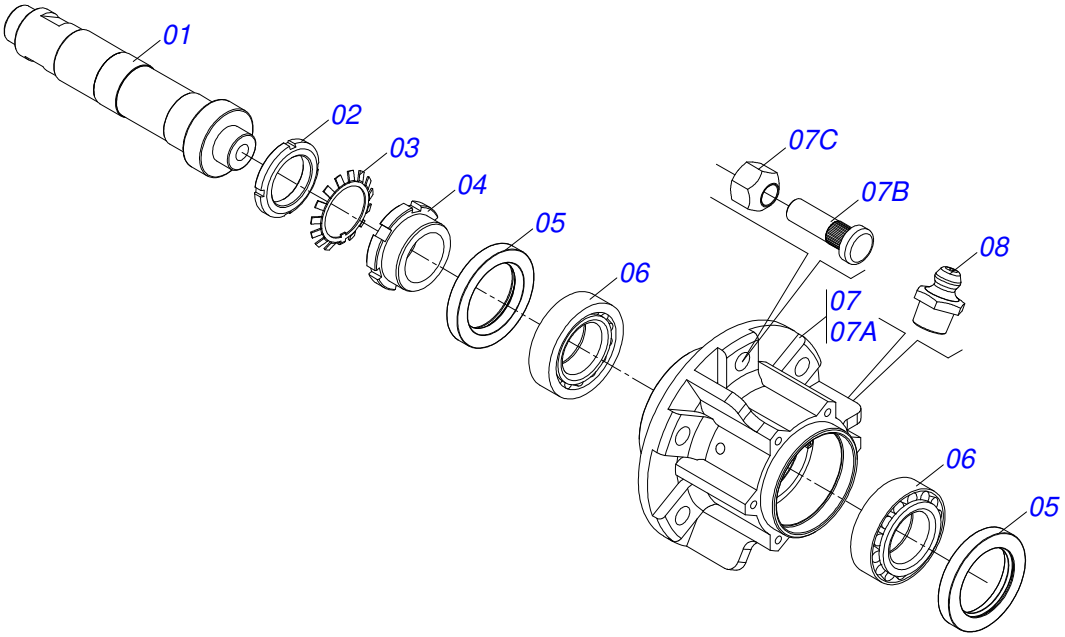

Item	Code	Description	See page	QT
01	0521012185	TRANSMISSION WHEEL AXLE		01
02	0503010330	KM 9 LOCKNUT		01
03	0503010329	LOCK WASHER		01
04	0511015949	LOCK NUT		01
05	0503010804	00547-B SEAL		02
06	0503019364	BEARING 25590/25523		02
07	0501110721	WHEEL HUB WITH SCREW / NUTS		01
07A	0571012990	CARRYING WHEEL HUB TRANSMISSION		01
07B	0501010186	WHEEL SCREW 5/8UNF X 2.1/8CR		06
07C	0503016516	5/8 UNF CONIC NUT		06
08	0503010002	1800 GREASE FITTING		01

FERTILIZER BOX ASSEMBLY - 3245

0511057230

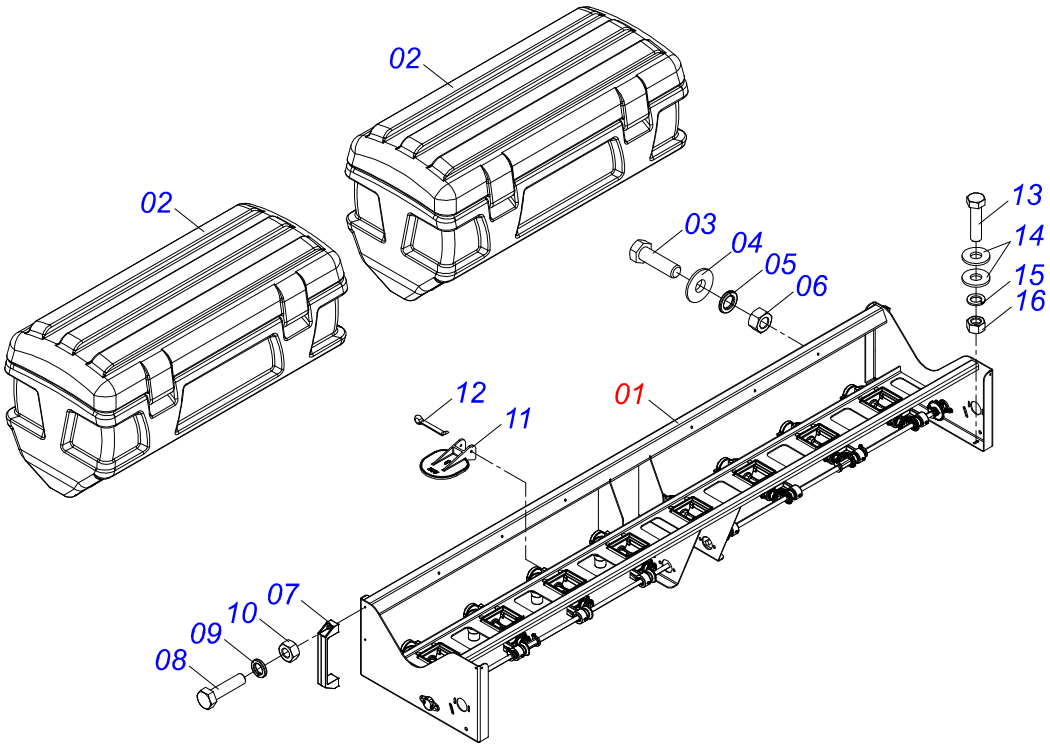

Item	Code	Description	See page	QT
01	0511057213	BOX SUPPORT WITH DISTRIBUTOR - 3245	53	01
02	0503062362	FERTILIZER BOX	66	02
03	0503013751	3/8 UNC X 1.1/4 BOLT		12
04	0571019051	FIXER BOX WASHER		12
05	0503012535	3/8" SPRING WASHER		12
06	0503012531	3/8" INOX NUT		12
07	0503011957	NYLON LUG		02
08	0503010371	5/16" X 1" BOLT		04
09	0503010179	LOCK WASHER		04
10	0503010337	5/16" NUT		04
11	0503034396	FERTILIZER SIDE COVER		08
12	0503010362	1/8 X 1.1/4 COTTERPIN		08
13	0503010751	C3/8" X 1.1/4" HEX BOLT G.5		10
14	0501010984	FLAT WASHER		20
15	0503010025	3/8" SPRING WASHER		10
16	0503010026	3/8" NUT		10

BOX SUPPORT WITH DISTRIBUTOR - 3245

0511057213

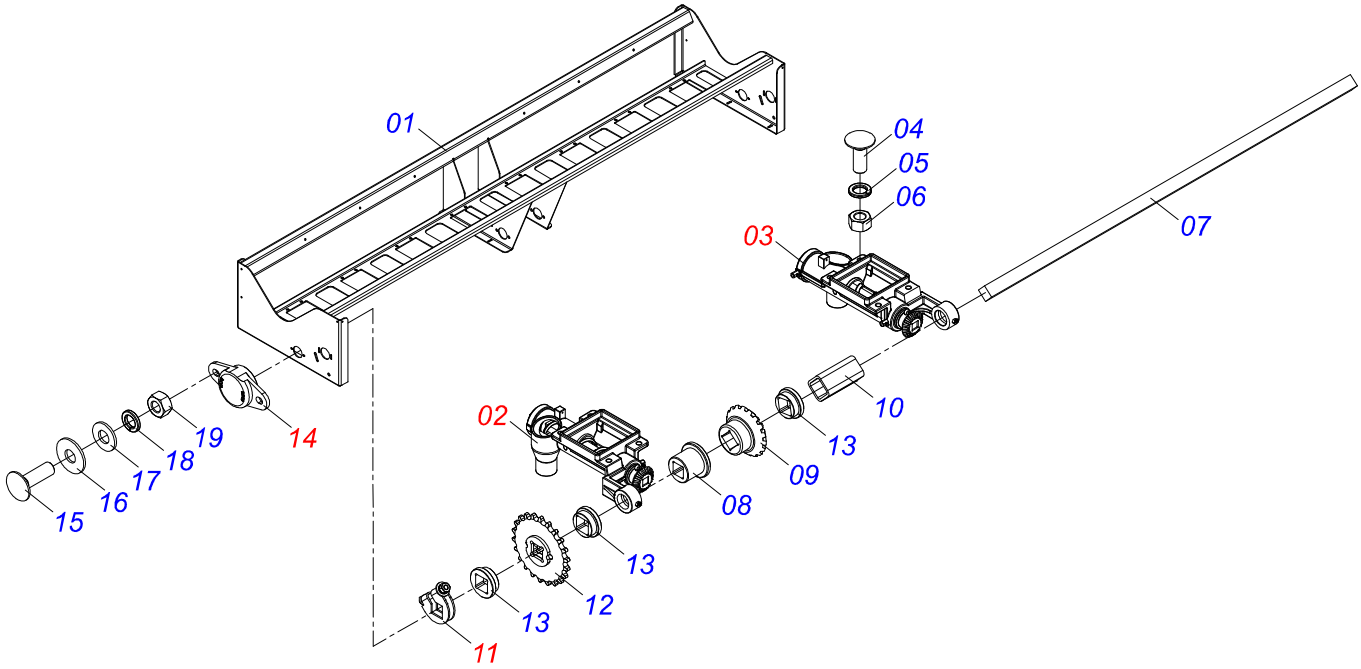

Item	Code	Description	See page	QT
01	0521065932	SUPPORT HOPPER FERTILIZER		01
02	0511051535	RIGHT SIDE FERTILIZER DISTRIBUTOR	68	04
03	0511051558	LEFT SIDE FERTILIZER DISTRIBUTOR	69	04
04	0501010942	3/8" X 1-1/4" BOLT		32
05	0503011443	3/8" SPRING WASHER		32
06	0503010026	3/8" NUT		32
07	0571018894	SQUARE SHAFT 3/4 X 1515		02
08	0503030275	AGRICULTURAL BEARING		08
09	1902010685	18Z CONICAL GEAR		08
10	0551018055	22,65 X 60 SLEEVE		02
11	0501053788	3/4 SQUARE AXLE FASTENER	70	04
12	0511061759	22Z P12,70 FQ 3/4" GEAR		02
13	0503030303	SUPPORT WASHER		04
14	0501056271	GEARBOX CLOSED BEARING	71	02
15	0503011953	5/16" X 1" BOLT		04
16	0501010694	FLAT WASHER		04
17	0521011039	FLAT WASHER		04
18	0503011444	SPRING WASHER		04
19	0503010337	5/16" NUT		04

FERTILIZER BOX ASSEMBLY - 3495

0511057364

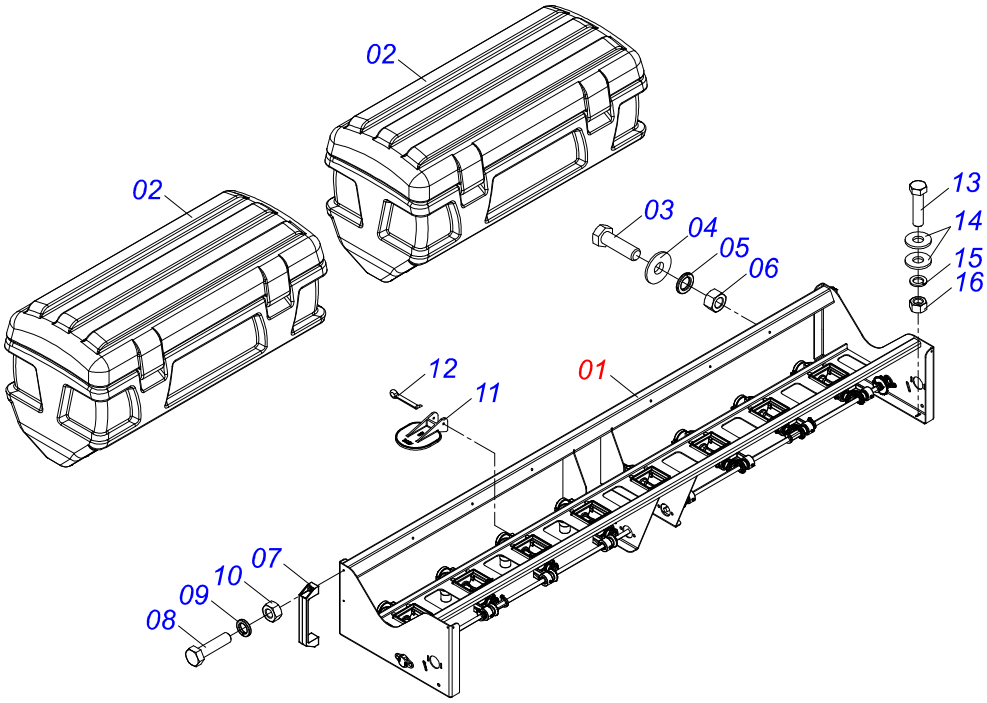

Item	Code	Description	See page	QT
01	0511057366	BOX SUPPORT WITH DISTRIBUTOR - 3495	55	01
02	0503062362	FERTILIZER BOX	66	02
03	0503013751	3/8 UNC X 1.1/4 BOLT		12
04	0571019051	FIXER BOX WASHER		12
05	0503012535	3/8" SPRING WASHER		12
06	0503012531	3/8" INOX NUT		12
07	0503011957	NYLON LUG		02
08	0503010371	5/16" X 1" BOLT		04
09	0503010179	LOCK WASHER		04
10	0503010337	5/16" NUT		04
11	0503034396	FERTILIZER SIDE COVER		08
12	0503010362	1/8 X 1.1/4 COTTERPIN		08
13	0503010751	C3/8" X 1.1/4" HEX BOLT G.5		10
14	0501010984	FLAT WASHER		20
15	0503010025	3/8" SPRING WASHER		10
16	0503010026	3/8" NUT		10

BOX SUPPORT WITH DISTRIBUTOR - 3495

0511057366

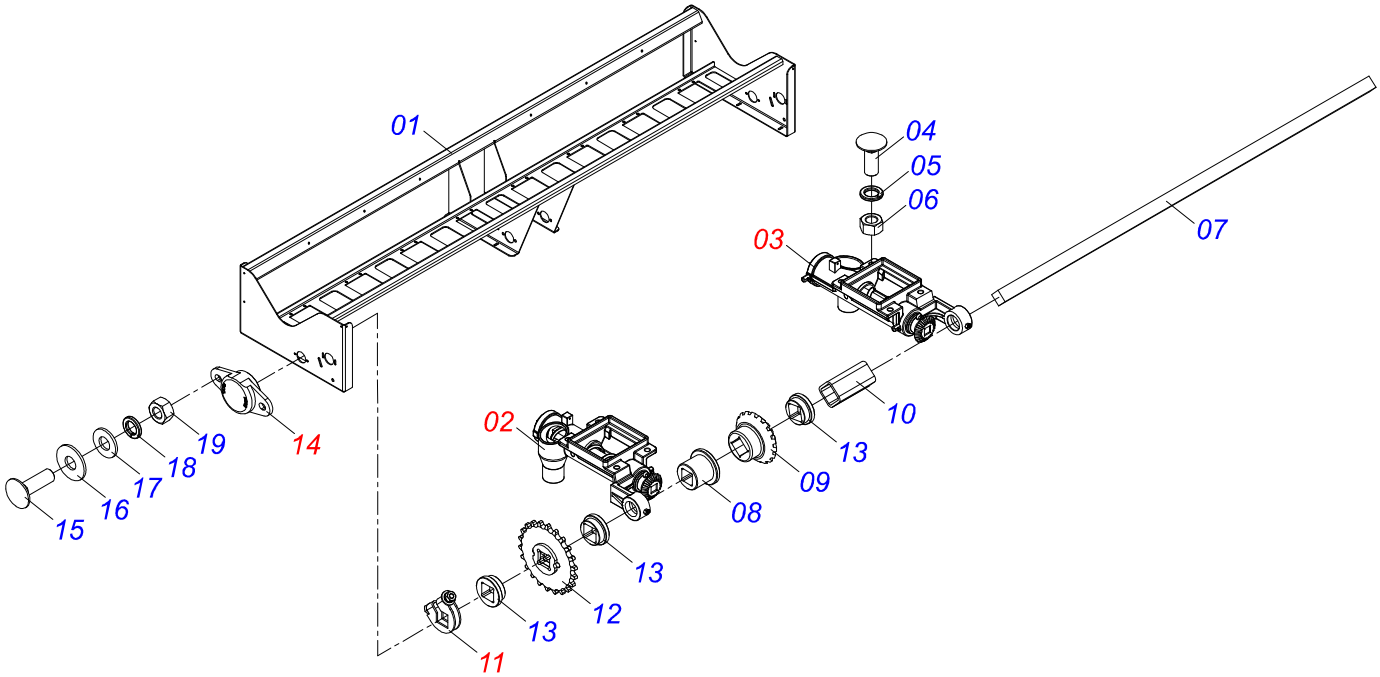

Item	Code	Description	See page	QT
01	0521065933	BEAN FERTILIZER SUPPORT		01
02	0511051535	RIGHT SIDE FERTILIZER DISTRIBUTOR	68	04
03	0511051558	LEFT SIDE FERTILIZER DISTRIBUTOR	69	04
04	0501010942	3/8" X 1-1/4" BOLT		32
05	0503011443	3/8" SPRING WASHER		32
06	0503010026	3/8" NUT		32
07	0571018895	SQUARE SHAFT		02
08	0503030275	AGRICULTURAL BEARING		08
09	1902010685	18Z CONICAL GEAR		08
10	0551018055	22,65 X 60 SLEEVE		02
11	0501053788	3/4 SQUARE AXLE FASTENER	70	04
12	0511061759	22Z P12,70 FQ 3/4" GEAR		02
13	0503030303	SUPPORT WASHER		04
14	0501056271	GEARBOX CLOSED BEARING	71	02
15	0503011953	5/16" X 1" BOLT		04
16	0501010694	FLAT WASHER		04
17	0521011039	FLAT WASHER		04
18	0503011444	SPRING WASHER		04
19	0503010337	5/16" NUT		04

FERTILIZER BOX ASSEMBLY - 4045

0511057305

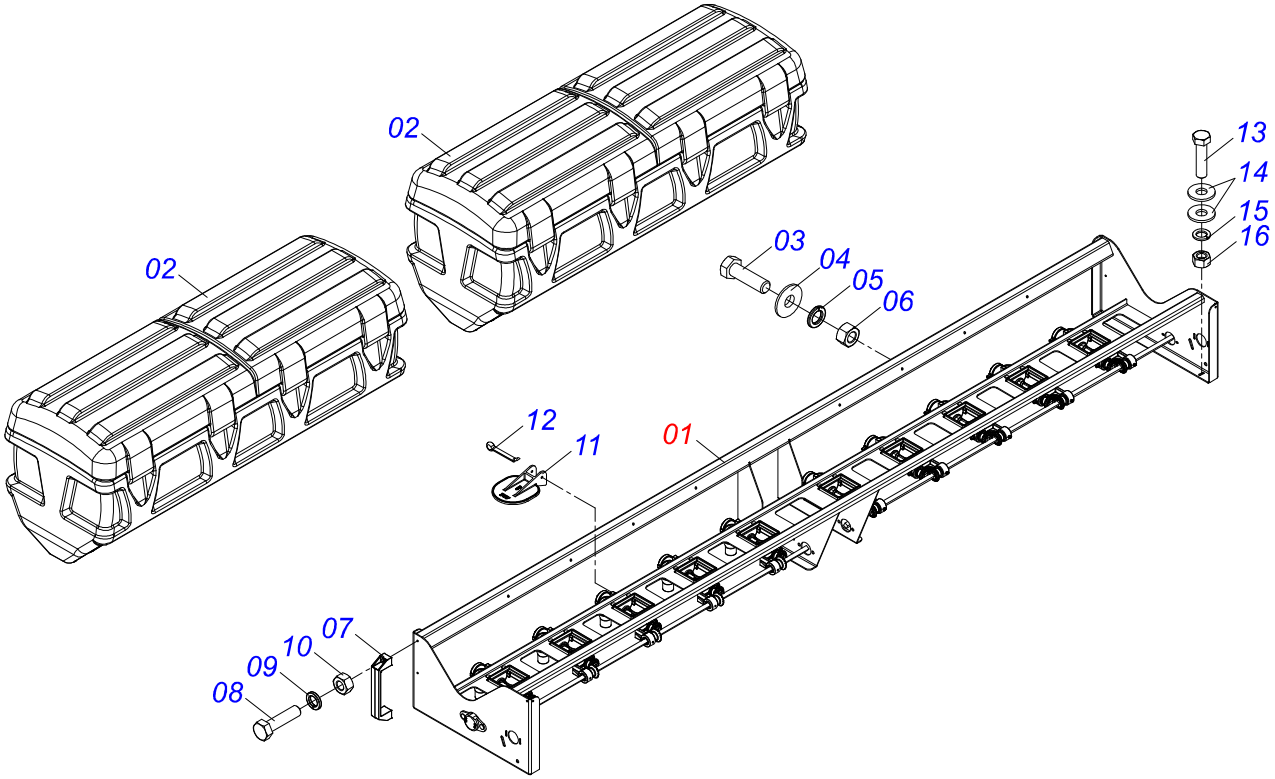

Item	Code	Description	See page	QT
01	0511057309	BOX SUPPORT WITH DISTRIBUTOR - 4045	57	01
02	0503062391	FERTILIZER BOX	67	02
03	0503013751	3/8 UNC X 1.1/4 BOLT		16
04	0571019051	FIXER BOX WASHER		16
05	0503012535	3/8" SPRING WASHER		16
06	0503012531	3/8" INOX NUT		16
07	0503011957	NYLON LUG		02
08	0503010371	5/16" X 1" BOLT		04
09	0503010179	LOCK WASHER		04
10	0503010337	5/16" NUT		04
11	0503034396	FERTILIZER SIDE COVER		10
12	0503010362	1/8 X 1.1/4 COTTERPIN		10
13	0503010751	C3/8" X 1.1/4" HEX BOLT G.5		10
14	0501010984	FLAT WASHER		20
15	0503010025	3/8" SPRING WASHER		10
16	0503010026	3/8" NUT		10

BOX SUPPORT WITH DISTRIBUTOR - 4045

0511057309

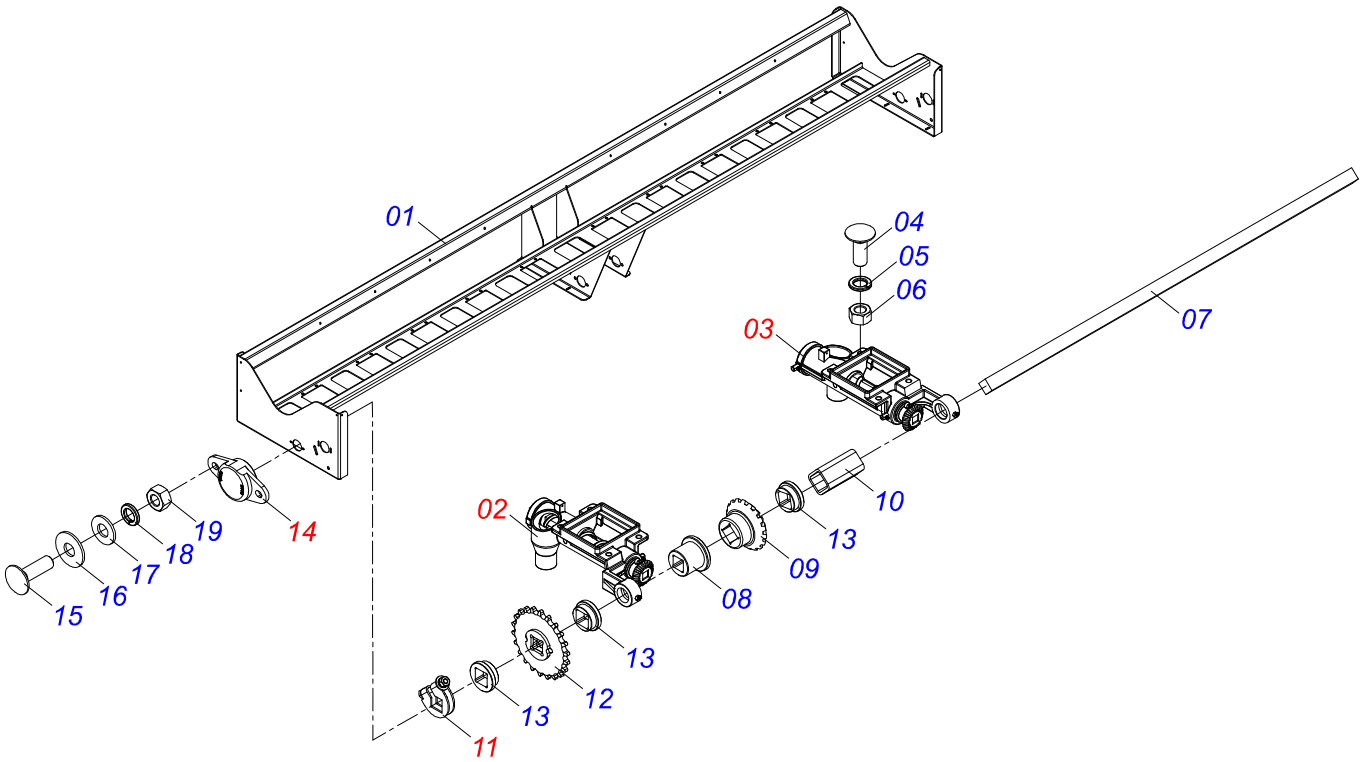

Item	Code	Description	See page	QT
01	0521065934	FERTILIZER BEAM SUPPORT		01
02	0511051535	RIGHT SIDE FERTILIZER DISTRIBUTOR	68	05
03	0511051558	LEFT SIDE FERTILIZER DISTRIBUTOR	69	05
04	0501010942	3/8" X 1-1/4" BOLT		40
05	0503011443	3/8" SPRING WASHER		40
06	0503010026	3/8" NUT		40
07	0571018896	SQUARE SHAFT		02
08	0503030275	AGRICULTURAL BEARING		10
09	1902010685	18Z CONICAL GEAR		10
10	0551018055	22,65 X 60 SLEEVE		02
11	0501053788	3/4 SQUARE AXLE FASTENER	70	04
12	0511061759	22Z P12,70 FQ 3/4" GEAR		02
13	0503030303	SUPPORT WASHER		04
14	0501056271	GEARBOX CLOSED BEARING	71	02
15	0503011953	5/16" X 1" BOLT		04
16	0501010694	FLAT WASHER		04
17	0521011039	FLAT WASHER		04
18	0503011444	SPRING WASHER		04
19	0503010337	5/16" NUT		04

FERTILIZER BOX ASSEMBLY - 4395

0511057360

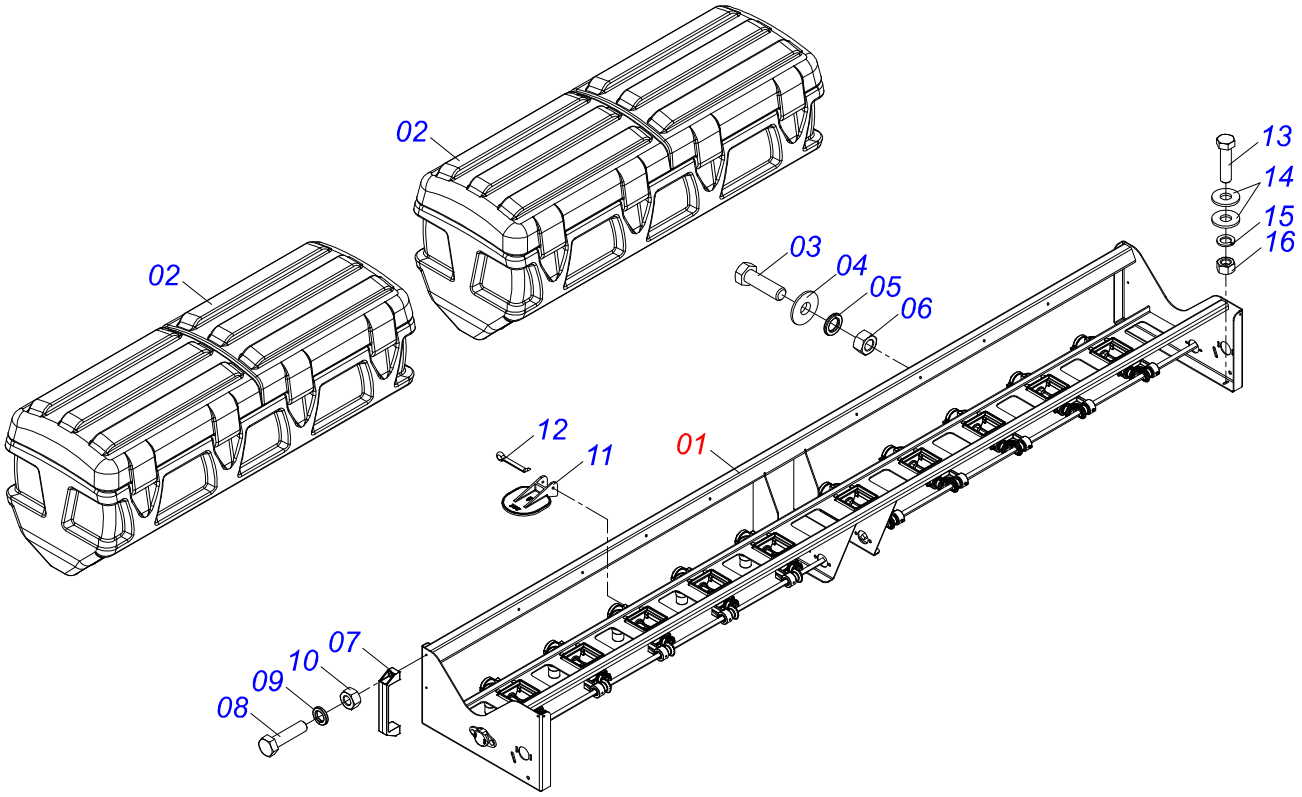

Item	Code	Description	See page	QT
01	0511057357	BOX SUPPORT WITH DISTRIBUTOR - 4395	59	01
02	0503062391	FERTILIZER BOX	67	02
03	0503013751	3/8 UNC X 1.1/4 BOLT		16
04	0571019051	FIXER BOX WASHER		16
05	0503012535	3/8" SPRING WASHER		16
06	0503012531	3/8" INOX NUT		16
07	0503011957	NYLON LUG		02
08	0503010371	5/16" X 1" BOLT		04
09	0503010179	LOCK WASHER		04
10	0503010337	5/16" NUT		04
11	0503034396	FERTILIZER SIDE COVER		10
12	0503010362	1/8 X 1.1/4 COTTERPIN		10
13	0503010751	C3/8" X 1.1/4" HEX BOLT G.5		10
14	0501010984	FLAT WASHER		20
15	0503010025	3/8" SPRING WASHER		10
16	0503010026	3/8" NUT		10

BOX SUPPORT WITH DISTRIBUTOR - 4395

0511057357

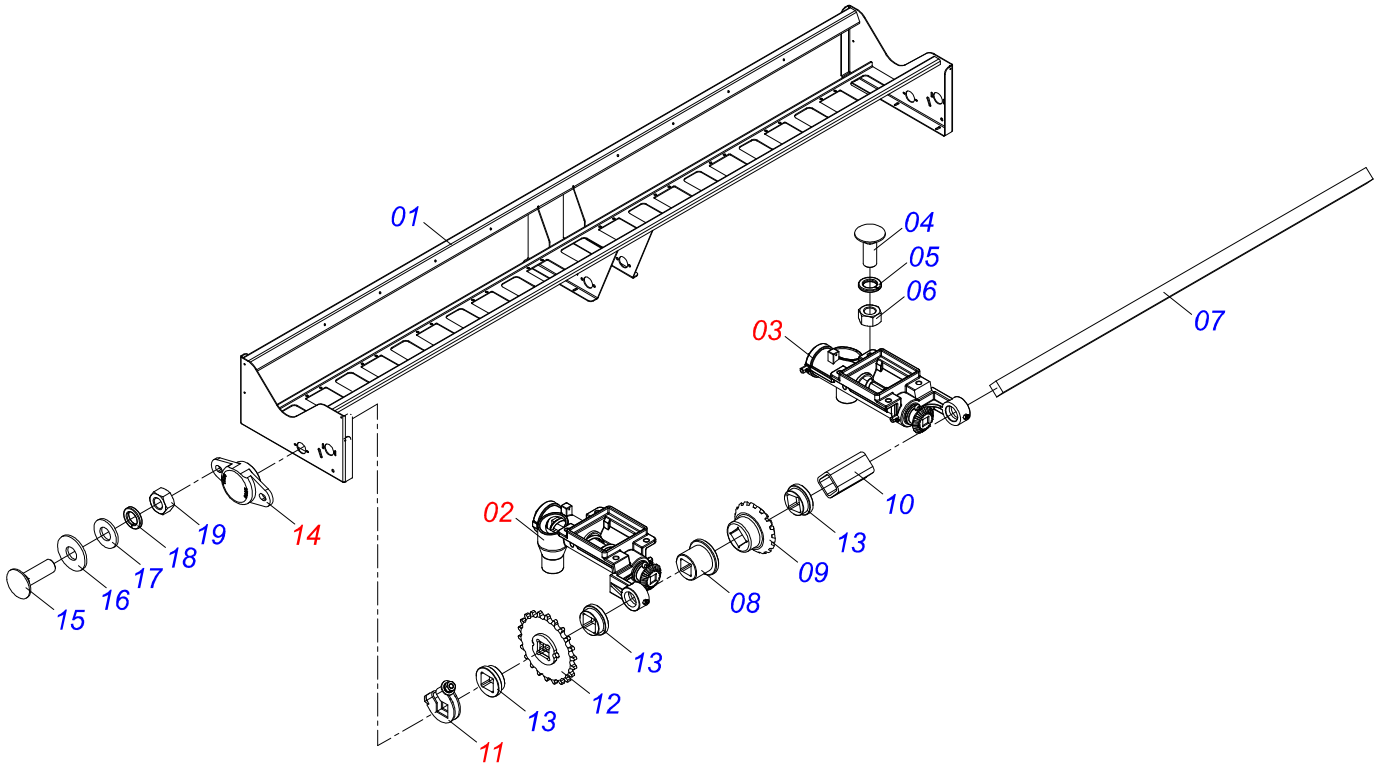

Item	Code	Description	See page	QT
01	0521065935	SUPPORT HOPPER FERTILIZER		01
02	0511051535	RIGHT SIDE FERTILIZER DISTRIBUTOR	68	05
03	0511051558	LEFT SIDE FERTILIZER DISTRIBUTOR	69	05
04	0501010942	3/8" X 1-1/4" BOLT		40
05	0503011443	3/8" SPRING WASHER		40
06	0503010026	3/8" NUT		40
07	0571018897	SQUARE SHAFT 3/4 X 2090		02
08	0503030275	AGRICULTURAL BEARING		10
09	1902010685	18Z CONICAL GEAR		10
10	0551018055	22,65 X 60 SLEEVE		02
11	0501053788	3/4 SQUARE AXLE FASTENER	70	04
12	0511061759	22Z P12,70 FQ 3/4" GEAR		02
13	0503030303	SUPPORT WASHER		04
14	0501056271	GEARBOX CLOSED BEARING	71	02
15	0503011953	5/16" X 1" BOLT		04
16	0501010694	FLAT WASHER		04
17	0521011039	FLAT WASHER		04
18	0503011444	SPRING WASHER		04
19	0503010337	5/16" NUT		04

FERTILIZER BOX ASSEMBLY - 4845

0511057326

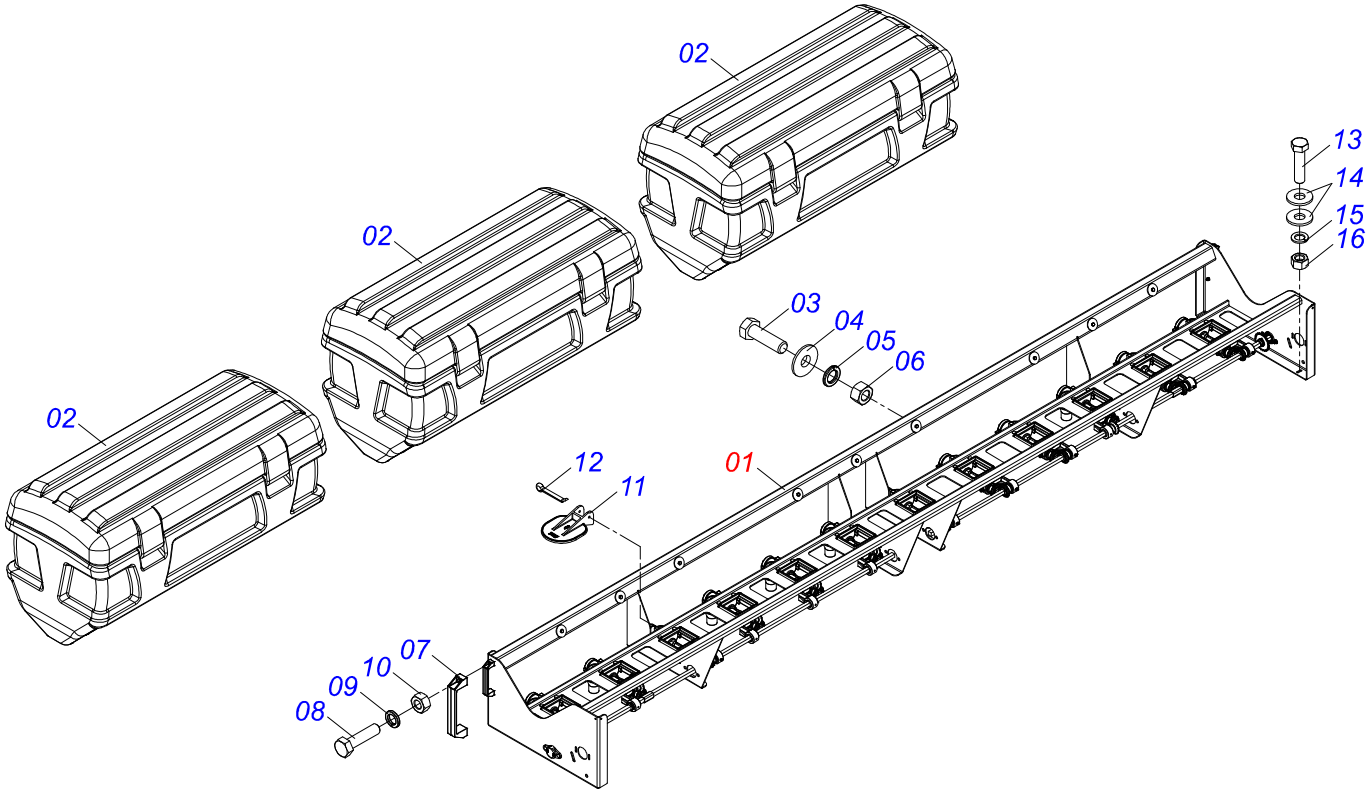

Item	Code	Description	See page	QT
01	0511057327	BOX SUPPORT WITH DISTRIBUTOR - 4845	61	01
02	0503062362	FERTILIZER BOX	66	03
03	0503013751	3/8 UNC X 1.1/4 BOLT		18
04	0571019051	FIXER BOX WASHER		18
05	0503012535	3/8" SPRING WASHER		18
06	0503012531	3/8" INOX NUT		18
07	0503011957	NYLON LUG		02
08	0503010371	5/16" X 1" BOLT		04
09	0503010179	LOCK WASHER		04
10	0503010337	5/16" NUT		04
11	0503034396	FERTILIZER SIDE COVER		12
12	0503010362	1/8 X 1.1/4 COTTERPIN		12
13	0503010751	C3/8" X 1.1/4" HEX BOLT G.5		14
14	0501010984	FLAT WASHER		28
15	0503010025	3/8" SPRING WASHER		14
16	0503010026	3/8" NUT		14

BOX SUPPORT WITH DISTRIBUTOR - 4845

0511057327

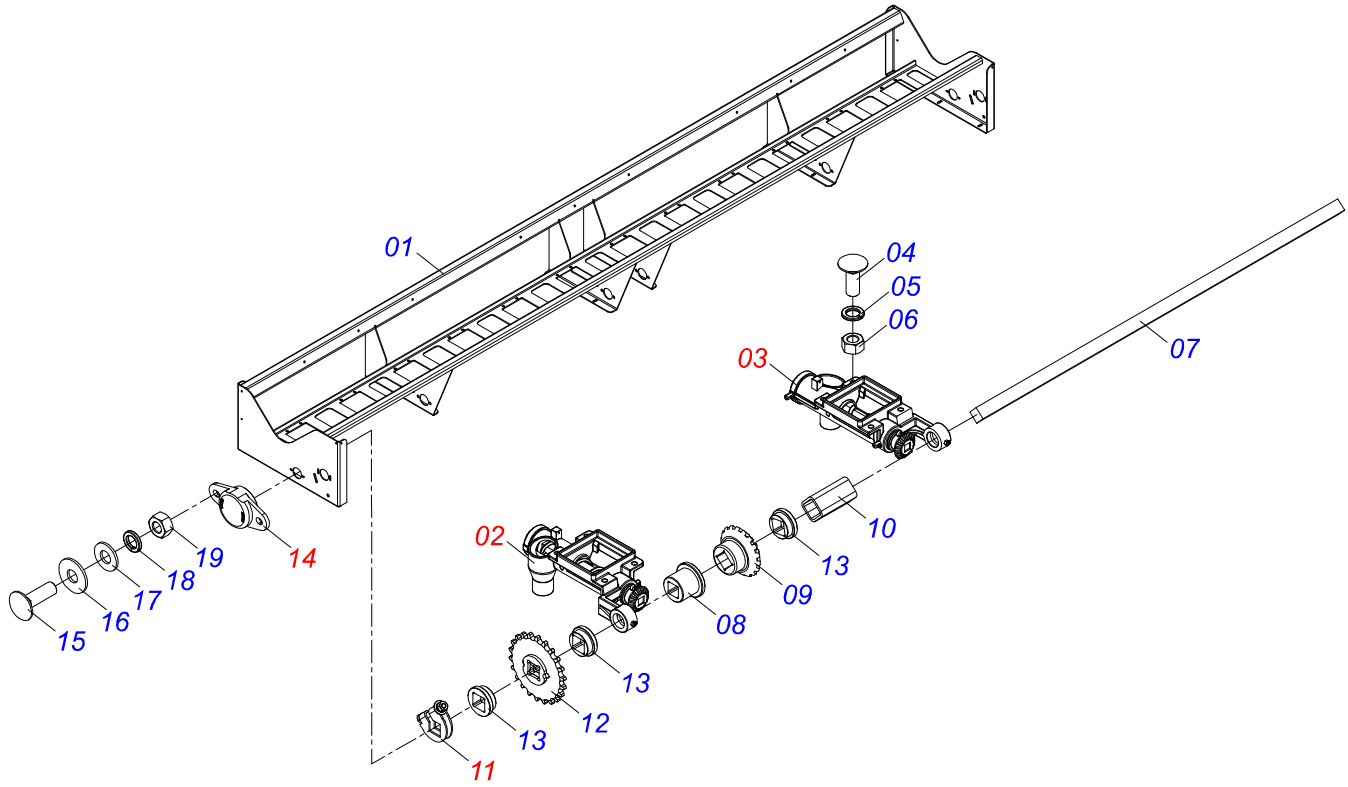

Item	Code	Description	See page	QT
01	0521065936	SUPPORT HOPPER FERTILIZER		01
02	0511051535	RIGHT SIDE FERTILIZER DISTRIBUTOR	68	06
03	0511051558	LEFT SIDE FERTILIZER DISTRIBUTOR	69	06
04	0501010942	3/8" X 1-1/4" BOLT		48
05	0503011443	3/8" SPRING WASHER		48
06	0503010026	3/8" NUT		48
07	0571018898	SQUARE SHAFT 3/4 X 2315		02
08	0503030275	AGRICULTURAL BEARING		12
09	1902010685	18Z CONICAL GEAR		12
10	0551018055	22,65 X 60 SLEEVE		02
11	0501053788	3/4 SQUARE AXLE FASTENER	70	04
12	0511061759	22Z P12,70 FQ 3/4" GEAR		02
13	0503030303	SUPPORT WASHER		04
14	0501056271	GEARBOX CLOSED BEARING	71	02
15	0503011953	5/16" X 1" BOLT		04
16	0501010694	FLAT WASHER		04
17	0521011039	FLAT WASHER		04
18	0503011444	SPRING WASHER		04
19	0503010337	5/16" NUT		04

FERTILIZER BOX ASSEMBLY - 5345

0511057389

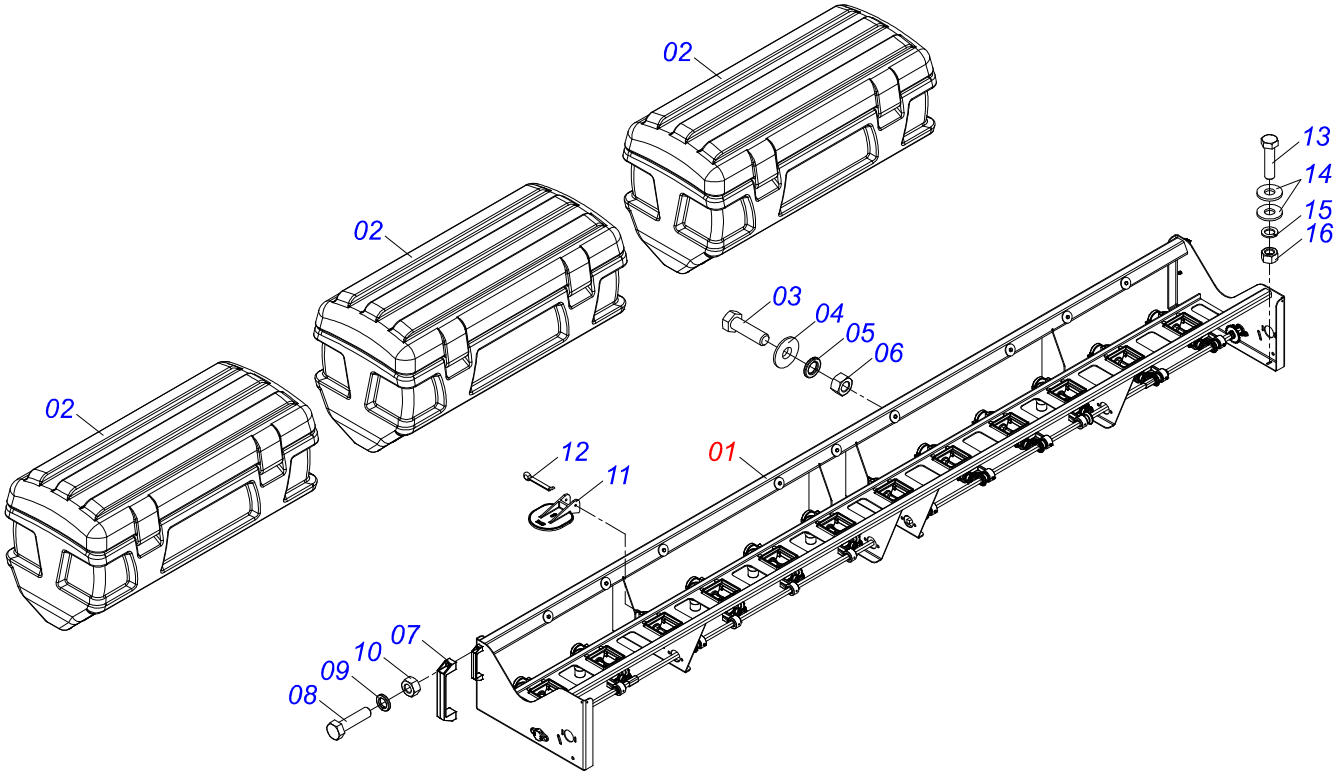

Item	Code	Description	See page	QT
01	0511057388	BOX SUPPORT WITH DISTRIBUTOR - 5345	63	01
02	0503062362	FERTILIZER BOX	66	03
03	0503013751	3/8 UNC X 1.1/4 BOLT		18
04	0571019051	FIXER BOX WASHER		18
05	0503012535	3/8" SPRING WASHER		18
06	0503012531	3/8" INOX NUT		18
07	0503011957	NYLON LUG		02
08	0503010371	5/16" X 1" BOLT		04
09	0503010179	LOCK WASHER		04
10	0503010337	5/16" NUT		04
11	0503034396	FERTILIZER SIDE COVER		12
12	0503010362	1/8 X 1.1/4 COTTERPIN		12
13	0503010751	C3/8" X 1.1/4" HEX BOLT G.5		14
14	0501010984	FLAT WASHER		28
15	0503010025	3/8" SPRING WASHER		14
16	0503010026	3/8" NUT		14

BOX SUPPORT WITH DISTRIBUTOR - 5345

0511057388

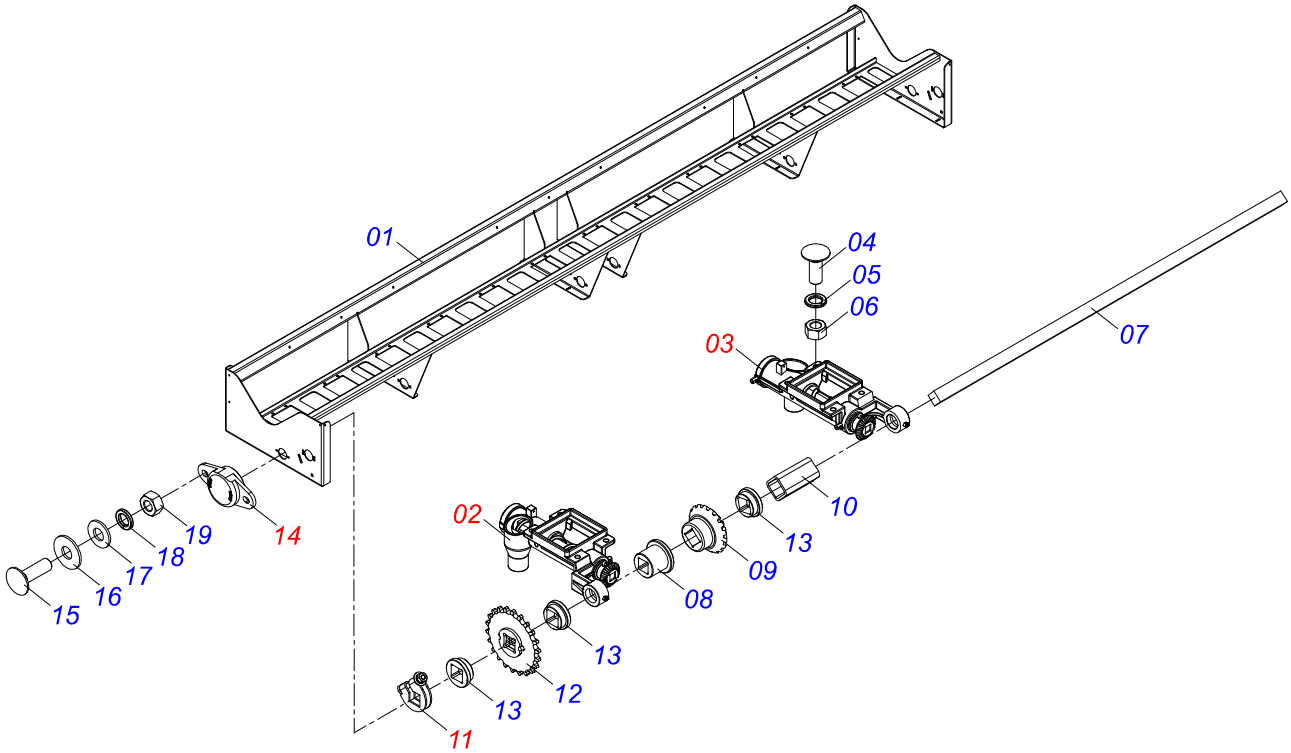

Item	Code	Description	See page	QT
01	0521065937	SUPPORT HOPPER FERTILIZER		01
02	0511051535	RIGHT SIDE FERTILIZER DISTRIBUTOR	68	06
03	0511051558	LEFT SIDE FERTILIZER DISTRIBUTOR	69	06
04	0501010942	3/8" X 1-1/4" BOLT		48
05	0503011443	3/8" SPRING WASHER		48
06	0503010026	3/8" NUT		48
07	0571018899	SQUARE SHAFT 3/4 X 2565		02
08	0503030275	AGRICULTURAL BEARING		12
09	1902010685	18Z CONICAL GEAR		12
10	0551018055	22,65 X 60 SLEEVE		02
11	0501053788	3/4 SQUARE AXLE FASTENER	70	04
12	0511061759	22Z P12,70 FQ 3/4" GEAR		02
13	0503030303	SUPPORT WASHER		04
14	0501056271	GEARBOX CLOSED BEARING	71	02
15	0503011953	5/16" X 1" BOLT		04
16	0501010694	FLAT WASHER		04
17	0521011039	FLAT WASHER		04
18	0503011444	SPRING WASHER		04
19	0503010337	5/16" NUT		04

FERTILIZER BOX ASSEMBLY - 5745

0521050051

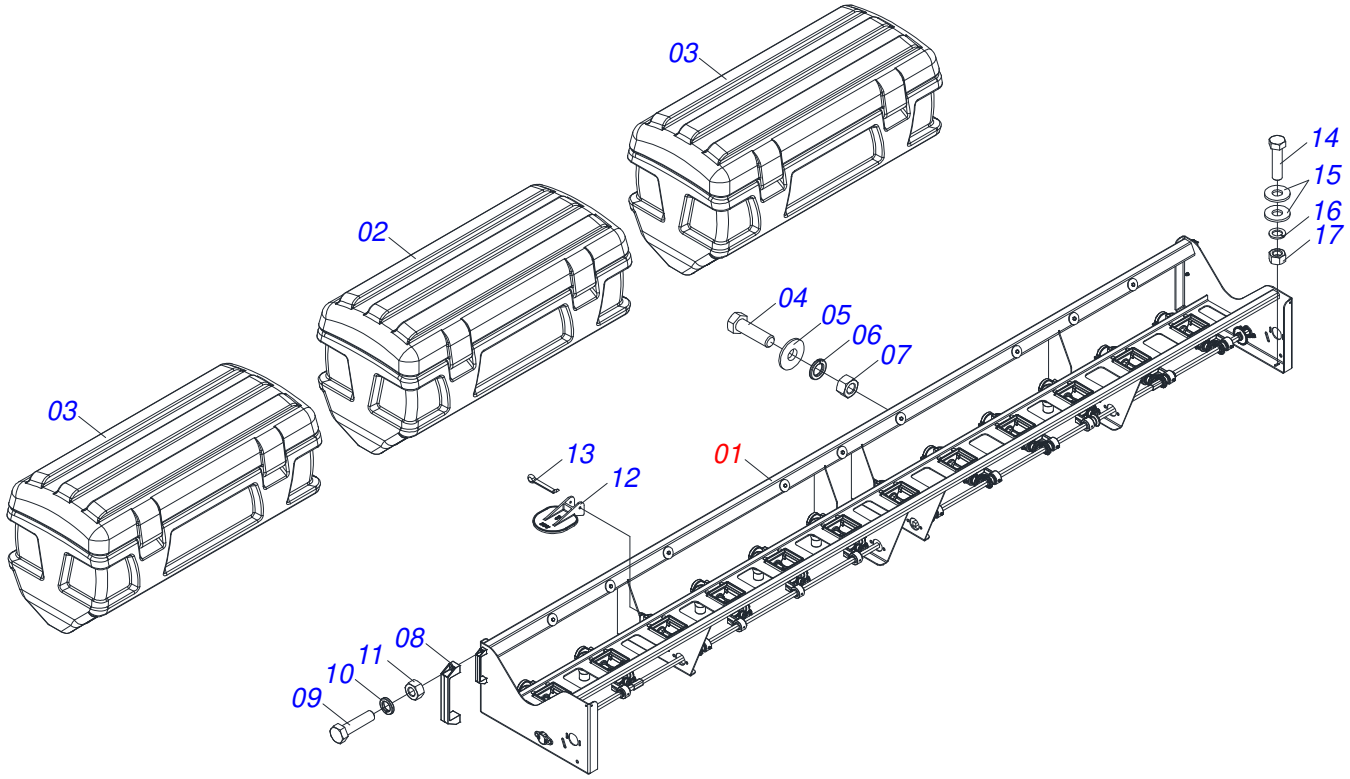

Item	Code	Description	See page	QT
001	0521050052	BOX SUPPORT WITH DISTRIBUTOR - 5745	65	01
002	0503062362	FERTILIZER BOX	66	01
003	0503062391	FERTILIZER BOX	67	02
004	0503013751	3/8 UNC X 1.1/4 BOLT		20
005	0571019051	FIXER BOX WASHER		20
006	0503012535	3/8" SPRING WASHER		20
007	0503012531	3/8" INOX NUT		20
008	0503011957	NYLON LUG		02
009	0503010371	5/16" X 1" BOLT		04
010	0503010179	LOCK WASHER		04
011	0503010337	5/16" NUT		04
012	0503034396	FERTILIZER SIDE COVER		14
013	0503010362	1/8 X 1.1/4 COTTERPIN		14
014	0503010751	C3/8" X 1.1/4" HEX BOLT G.5		14
015	0501010984	FLAT WASHER		28
016	0503010025	3/8" SPRING WASHER		14
017	0503010026	3/8" NUT		14

BOX SUPPORT WITH DISTRIBUTOR - 5745

0521050052

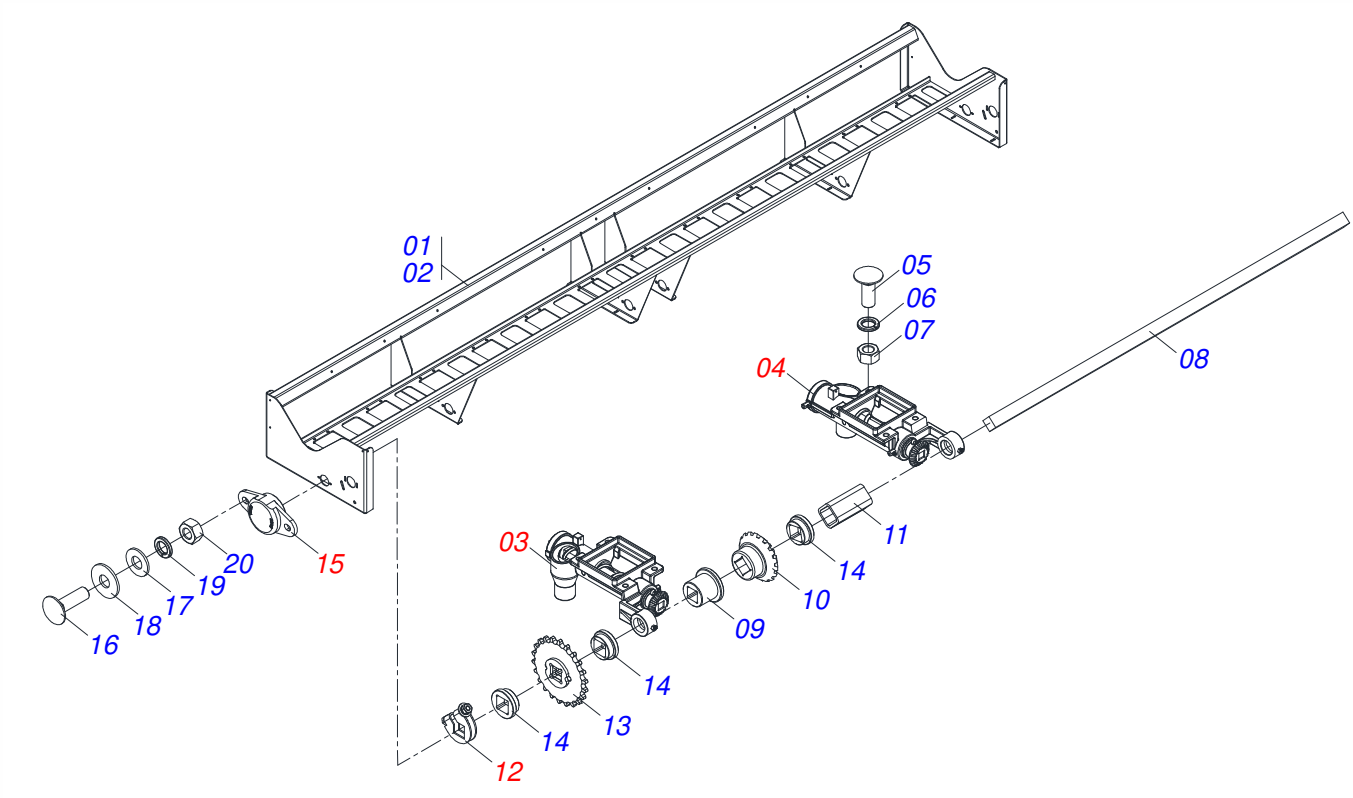

Item	Code	Description	See page	QT
01	0521067303	SUPPORT FERTILIZER RIGHT BOX WITH DISTRIBUTOR		01
02	0521067304	LEFT FERTILIZER BOX SUPPORT - 5745		01
03	0511051535	RIGHT SIDE FERTILIZER DISTRIBUTOR	68	07
04	0511051558	LEFT SIDE FERTILIZER DISTRIBUTOR	69	07
05	0501010942	3/8" X 1-1/4" BOLT		56
06	0503011443	3/8" SPRING WASHER		56
07	0503010026	3/8" NUT		56
08	0581012893	SQUARE SHAFT		02
09	0503030275	AGRICULTURAL BEARING		14
10	1902010685	18Z CONICAL GEAR		14
11	0551018055	22,65 X 60 SLEEVE		02
12	0501053788	3/4 SQUARE AXLE FASTENER	70	04
13	0511061759	22Z P12,70 FQ 3/4" GEAR		02
14	0503030303	SUPPORT WASHER		04
15	0501056271	GEARBOX CLOSED BEARING	71	02
16	0503011953	5/16" X 1" BOLT		04
17	0501010694	FLAT WASHER		04
18	0521011039	FLAT WASHER		04
19	0503011444	SPRING WASHER		04
20	0503010337	5/16" NUT		04

FERTILIZER BOX

0503062362

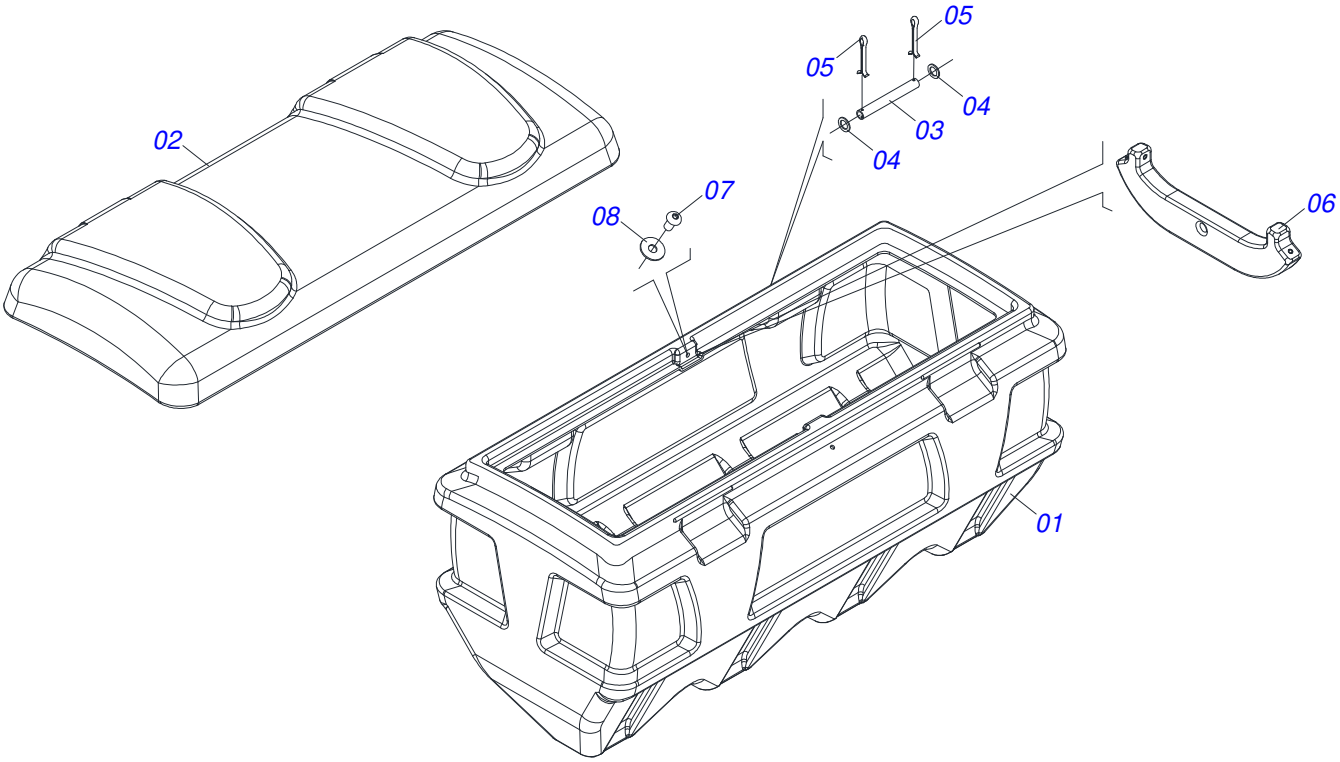

Item	Code	Description	See page	QT
01	0503034085	BEAN FERTILIZER ASSY		01
02	0503034086	BOX COVER		01
03	0503034087	TUBE COVER PIVOT		02
04	0503034088	WASHER		04
05	0503010131	3/16" X 1-1/2" COTTERPIN		04
06	0503034130	PLATE		01
07	0503032053	BOLT C.A.S.I		04
08	0503034220	FLAT WASHER		04

FERTILIZER BOX

0503062391

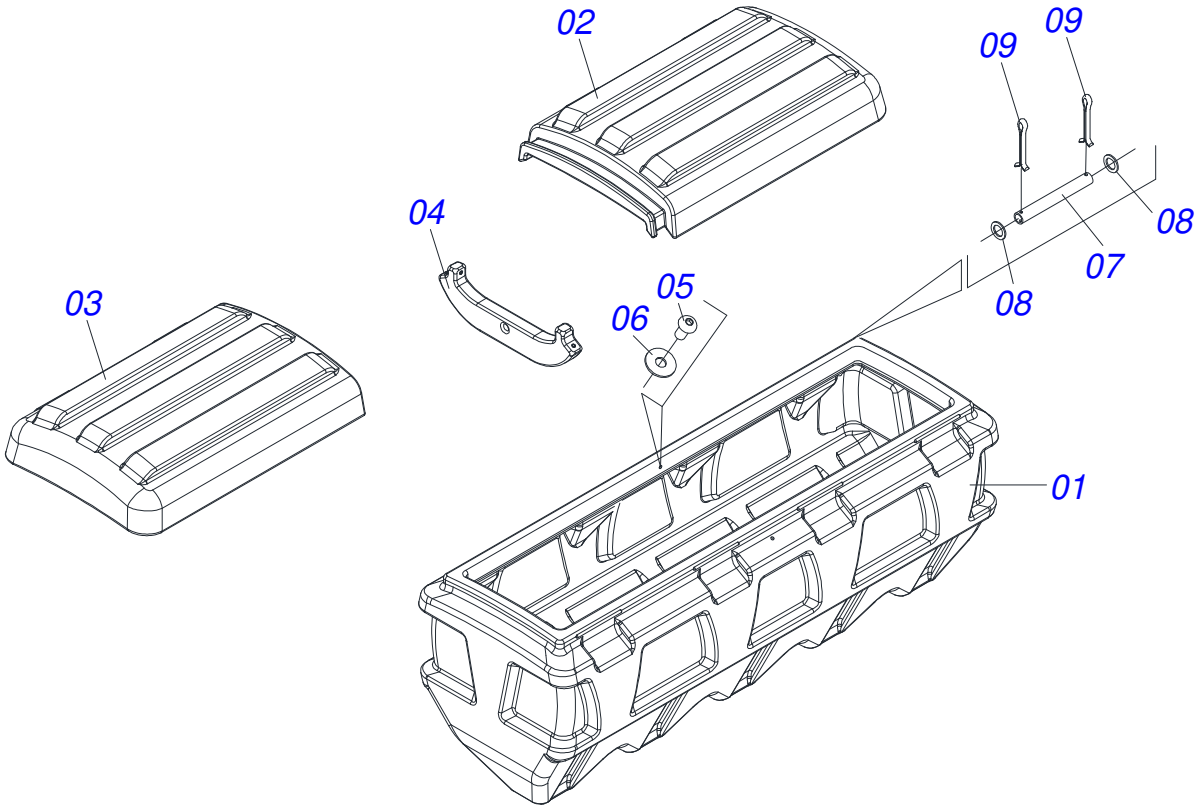

Item	Code	Description	See page	QT
01	0503034127	FERTILIZER BEAM COVER		01
02	0503034129	LOWER COVER		01
03	0503034128	UPPER COVER		01
04	0503034130	PLATE		01
05	0503032053	BOLT C.A.S.I		04
06	0503034220	FLAT WASHER		04
07	0503034087	TUBE COVER PIVOT		04
08	0503034088	WASHER		08
09	0503010131	3/16" X 1-1/2" COTTERPIN		08

RIGHT SIDE FERTILIZER DISTRIBUTOR

0511051535

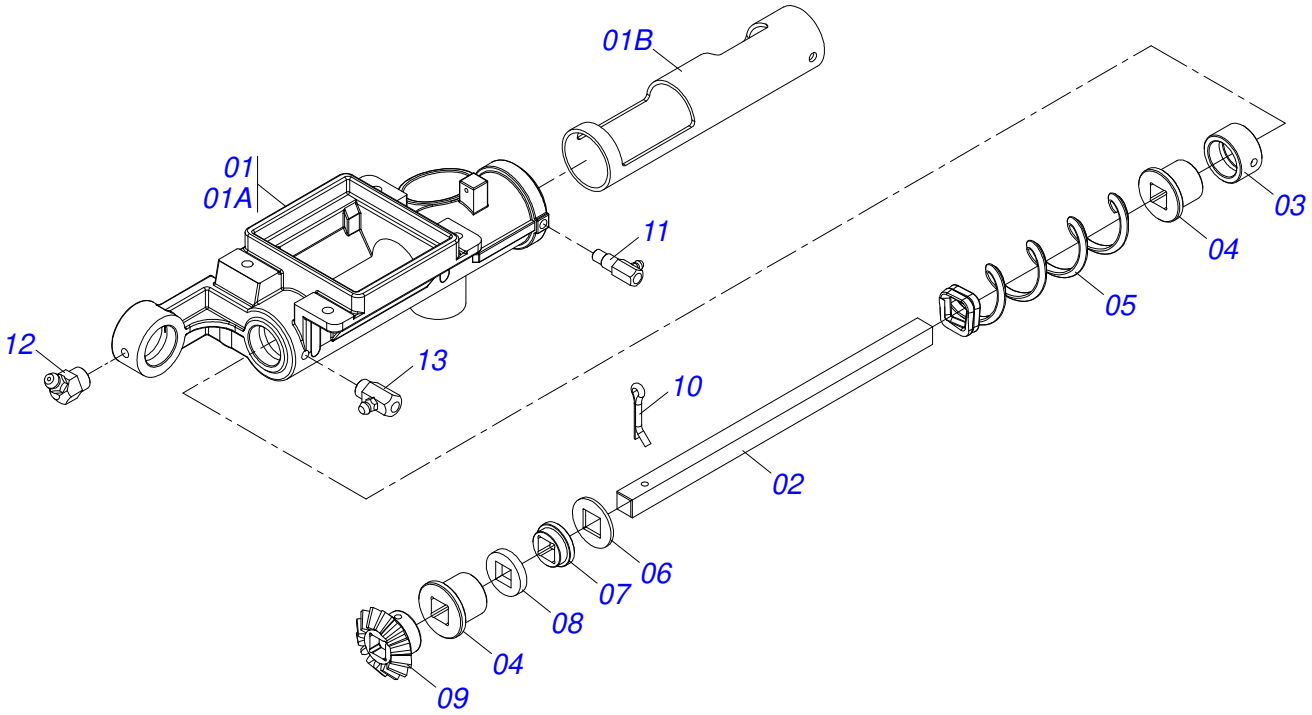

Item	Code	Description	See page	QT
01	0501110676	SIDE FERTILIZER DISTRIBUTOR		01
01A	0502012688	SIDE FERTILIZER DISTRIBUTOR		01
01B	0571010542	FERTILIZER DISTRIBUTOR TUBE		01
02	0501019851	DISTRIBUTOR FERTILIZER AXLE		01
03	0521010309	SLEEVE INTER		01
04	0503030275	AGRICULTURAL BEARING		02
05	0503031165	LEFT HELICOID CONDUCTOR		01
06	0501010637	FLAT WASHER		01
07	0503030303	SUPPORT WASHER		01
08	0501013774	GREASE SEAL		01
09	0591017505	GEAR		01
10	0503010523	1/4" X 2" COTTERPIN		01
11	0503011962	GREASE FITTING		01
12	0503010003	1845 GREASE FITTING		01
13	0503012826	CREASE FITTING		01

LEFT SIDE FERTILIZER DISTRIBUTOR

0511051558

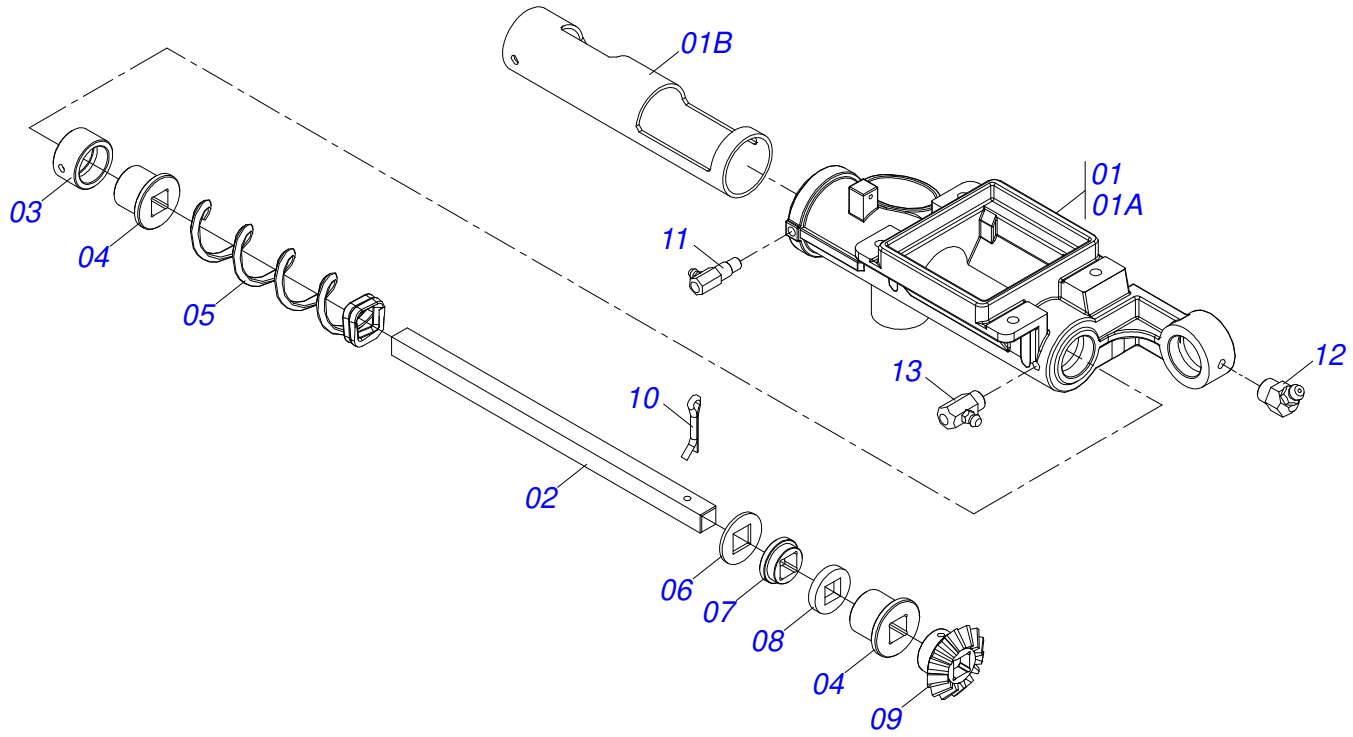

Item	Code	Description	See page	QT
01	0501110682	DISTRIBUTOR FERTILIZER WITH LEFT SIDE OUTLET		01
01A	0502012700	SIDE FERTILIZER DISTRIBUTOR		01
01B	0571010560	FERTILIZER DISTRIBUTOR TUBE		01
02	0501019851	DISTRIBUTOR FERTILIZER AXLE		01
03	0521010309	SLEEVE INTER		01
04	0503030275	AGRICULTURAL BEARING		02
05	0503031164	RIGHT HELICOID CONDUCTOR		01
06	0501010637	FLAT WASHER		01
07	0503030303	SUPPORT WASHER		01
08	0501013774	GREASE SEAL		01
09	0591017505	GEAR		01
10	0503010523	1/4" X 2" COTTERPIN		01
11	0503011962	GREASE FITTING		01
12	0503010003	1845 GREASE FITTING		01
13	0503012826	CREASE FITTING		01

3/4 SQUARE AXLE FASTENER

0501053788

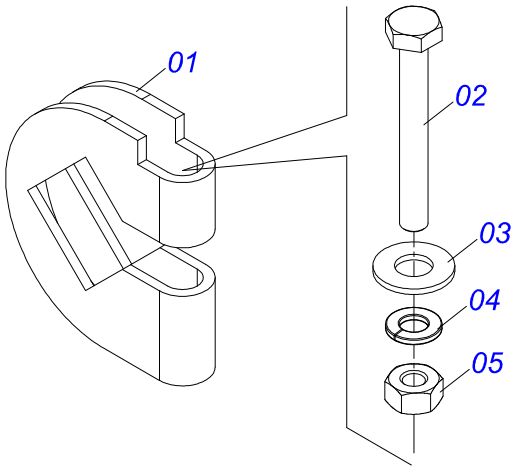

Item	Code	Description	See page	QT
01	0521010691	AXLE FASTENER		01
02	0503010373	SCREW 1/4 UNC X 2 CS G.2 ZN		01
03	0511017303	FLAT WASHER		01
04	0503010143	1/4" SPRING WASHER		01
05	0503010144	1/4" NUT		01

GEARBOX CLOSED BEARING

0501056271

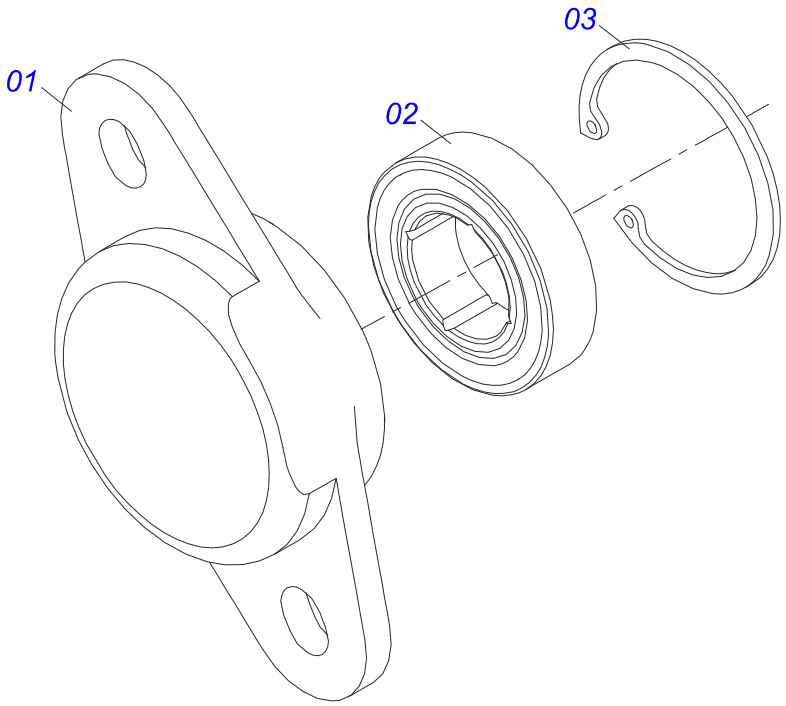

Item	Code	Description	See page	QT
01	0502012310	GEAR BOX CLOSE BEARING		01
02	0503013462	BEARING WITH BALL BEARING		01
03	0503011105	SEAL RING		01

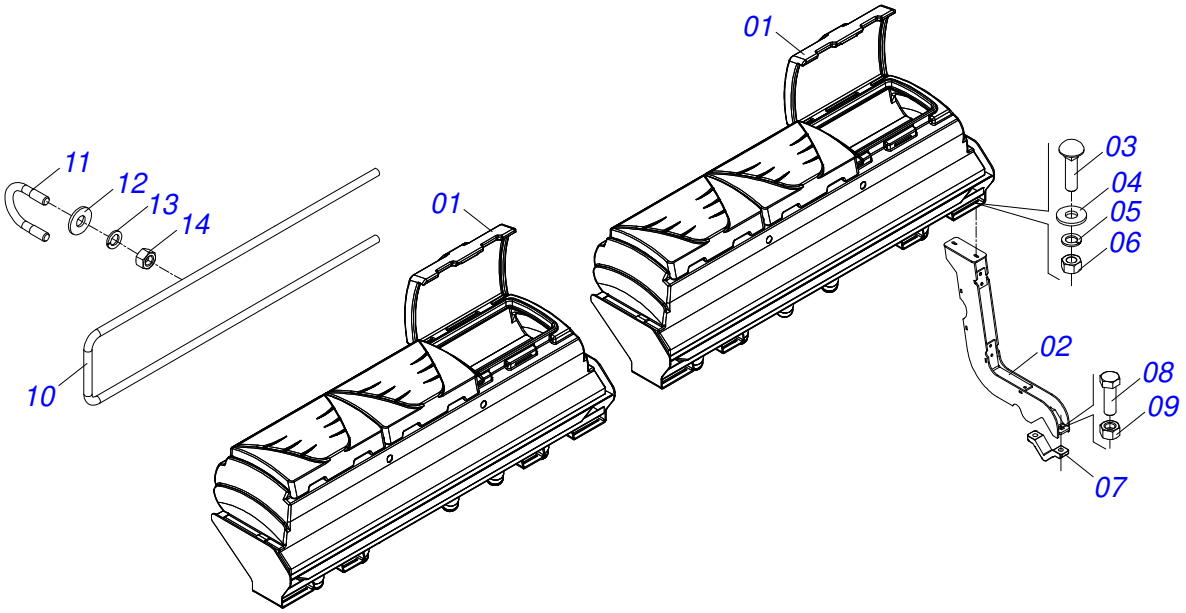

Item	Code	Description	See page	QT
01	0521050490	2 BOXES WITH 7 CONDUCTORS ASSEMBLY	73	01
02	0521066102	TOWER SUPPORT HOPPER		04
03	0501010942	3/8" X 1-1/4" BOLT		08
04	0501010984	FLAT WASHER		08
05	0503010025	3/8" SPRING WASHER		08
06	0503010026	3/8" NUT		08
07	0502010175	HITCH CLAMP		04
08	0501011543	5/8" X 4" BOLT		08
09	0503012412	5/8 UNC SELF LOCKING NUT		08
10	0571019392	PROTECTOR		02
11	0551019884	45 X 50 X 3/8 FASTENER		08
12	0501010453	FLAT WASHER		16
13	0503010025	3/8" SPRING WASHER		16
14	0503010026	3/8" NUT		16

2 BOXES WITH 7 CONDUCTORS ASSEMBLY

0521050490

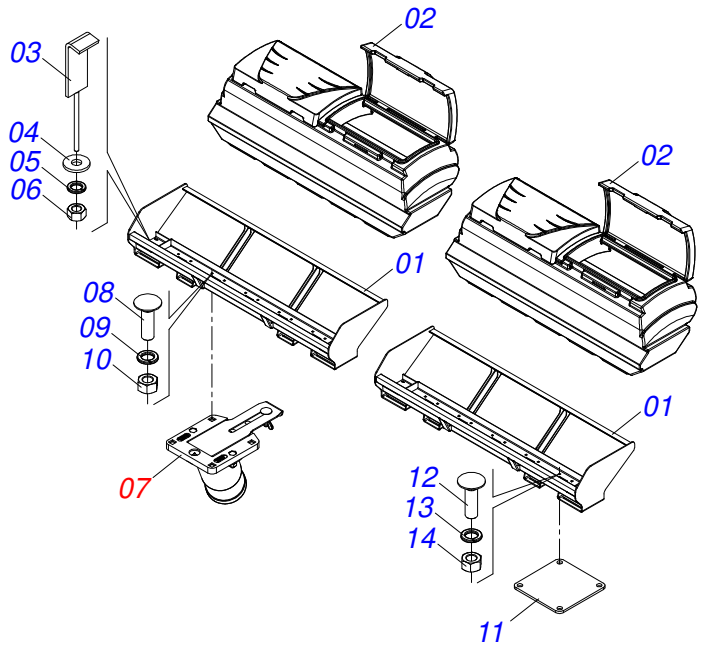

Item	Code	Description	See page	QT
01	0521064748	05 NOZZLES SINGLE SEED BOX SUPPORT		02
02	0503061987	05 NOZZLES FERTILIZER BOX		02
03	0521063401	SEED BOX ONLY FIXING LOCK		04
04	0501010984	FLAT WASHER		04
05	0503010025	3/8" SPRING WASHER		04
06	0503010026	3/8" NUT		04
07	0511057690	3" ARTICULATED SEED CONDUCTOR	95	07
08	0501010942	3/8" X 1-1/4" BOLT		28
09	0503010025	3/8" SPRING WASHER		28
10	0503010026	3/8" NUT		28
11	0571015773	SUPPORT SEED		03
12	0501011643	3/8 X 1"BOLT		12
13	0503010025	3/8" SPRING WASHER		12
14	0503010026	3/8" NUT		12

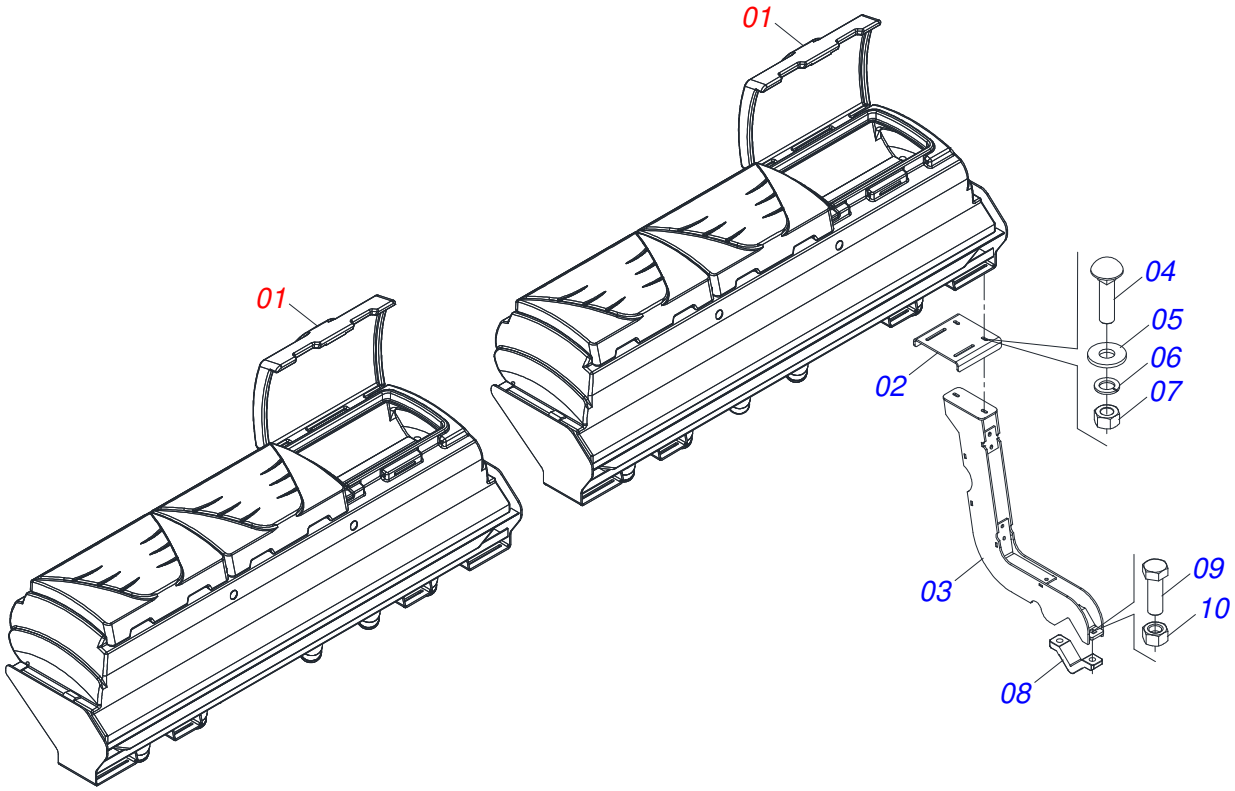

Item	Code	Description	See page	QT
01	0511058770	2 BOXES WITH 8 CONDUCTORS ASSEMBLY	76	01
02	0581012653	SIDE SUPPORT BASE		04
03	0521066102	TOWER SUPPORT HOPPER		04
04	0501010942	3/8" X 1-1/4" BOLT		16
05	0501010984	FLAT WASHER		16
06	0503010025	3/8" SPRING WASHER		16
07	0503010026	3/8" NUT		16
08	0502010175	HITCH CLAMP		04
09	0501011543	5/8" X 4" BOLT		08
10	0503012412	5/8 UNC SELF LOCKING NUT		08

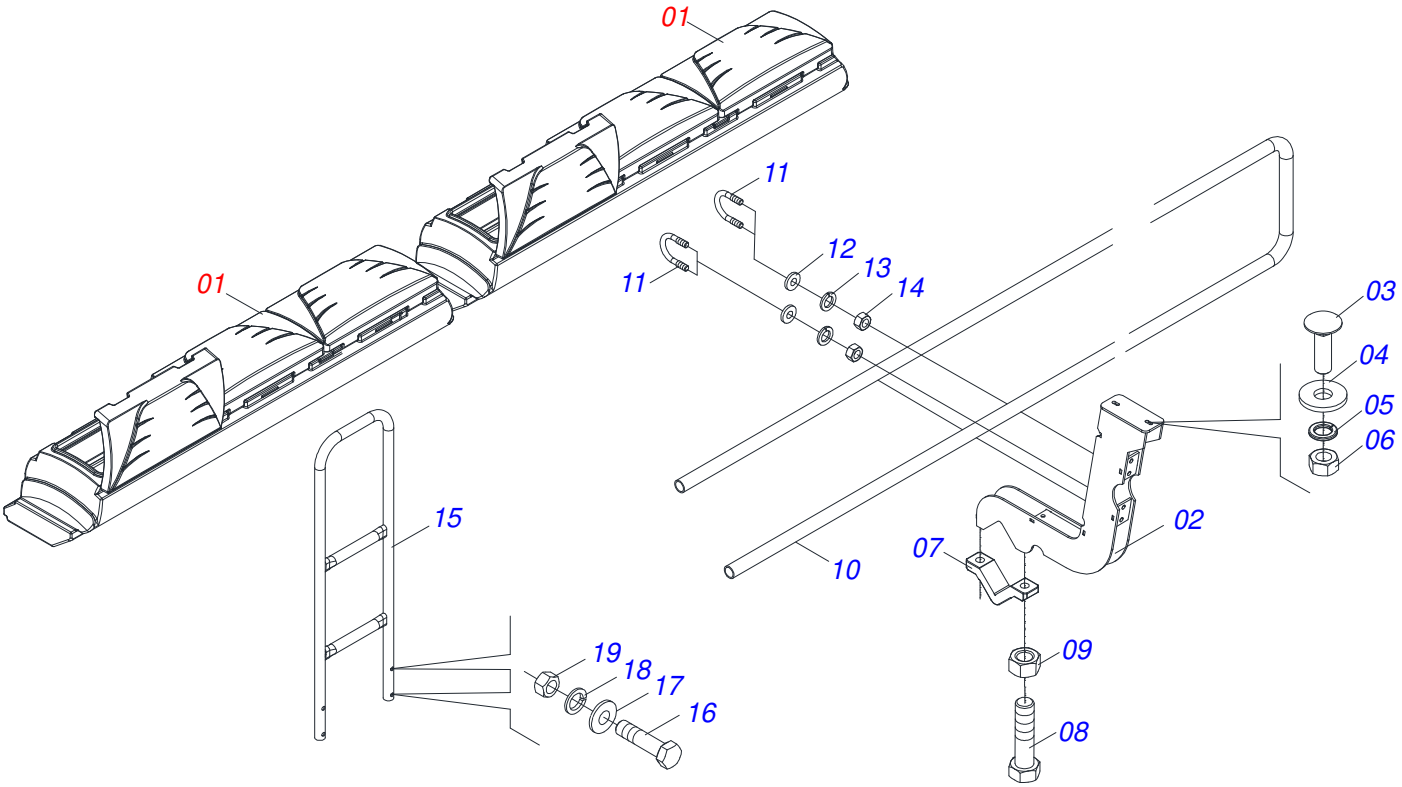

Item	Code	Description	See page	QT
01	0511058770	2 BOXES WITH 8 CONDUCTORS ASSEMBLY	76	01
02	0521066102	TOWER SUPPORT HOPPER		04
03	0501010942	3/8" X 1-1/4" BOLT		08
04	0501010984	FLAT WASHER		08
05	0503010025	3/8" SPRING WASHER		08
06	0503010026	3/8" NUT		08
07	0502010175	HITCH CLAMP		04
08	0501011543	5/8" X 4" BOLT		08
09	0503012412	5/8 UNC SELF LOCKING NUT		08
10	0571019393	PROTECTOR		02
11	0551019884	45 X 50 X 3/8 FASTENER		08
12	0501010453	FLAT WASHER		16
13	0503010025	3/8" SPRING WASHER		16
14	0503010026	3/8" NUT		16
15	0521066211	PROTECTOR CENTRAL		01
16	0503011172	BOLT 1/2 UNC X 2.1/2 C S G.5 ZN		04
17	0501013519	FLAT WASHER		04
18	0503010019	1/2" SPRING WASHER		04
19	0503010060	1/2" NUT		04

2 BOXES WITH 8 CONDUCTORS ASSEMBLY

0511058770

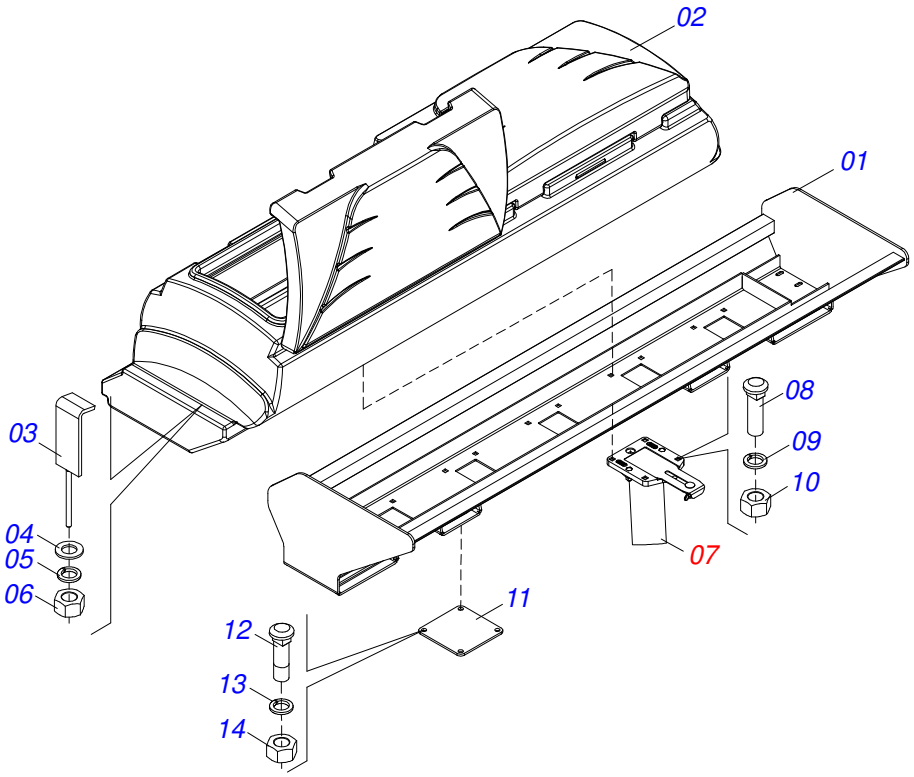

Item	Code	Description	See page	QT
01	0521064748	05 NOZZLES SINGLE SEED BOX SUPPORT		02
02	0503061987	05 NOZZLES FERTILIZER BOX		02
03	0521063401	SEED BOX ONLY FIXING LOCK		04
04	0501010984	FLAT WASHER		04
05	0503010025	3/8" SPRING WASHER		04
06	0503010026	3/8" NUT		04
07	0511057690	3" ARTICULATED SEED CONDUCTOR	95	08
08	0501010942	3/8" X 1-1/4" BOLT		32
09	0503010025	3/8" SPRING WASHER		32
10	0503010026	3/8" NUT		32
11	0571015773	SUPPORT SEED		02
12	0501011643	3/8 X 1"BOLT		08
13	0503010025	3/8" SPRING WASHER		08
14	0503010026	3/8" NUT		08

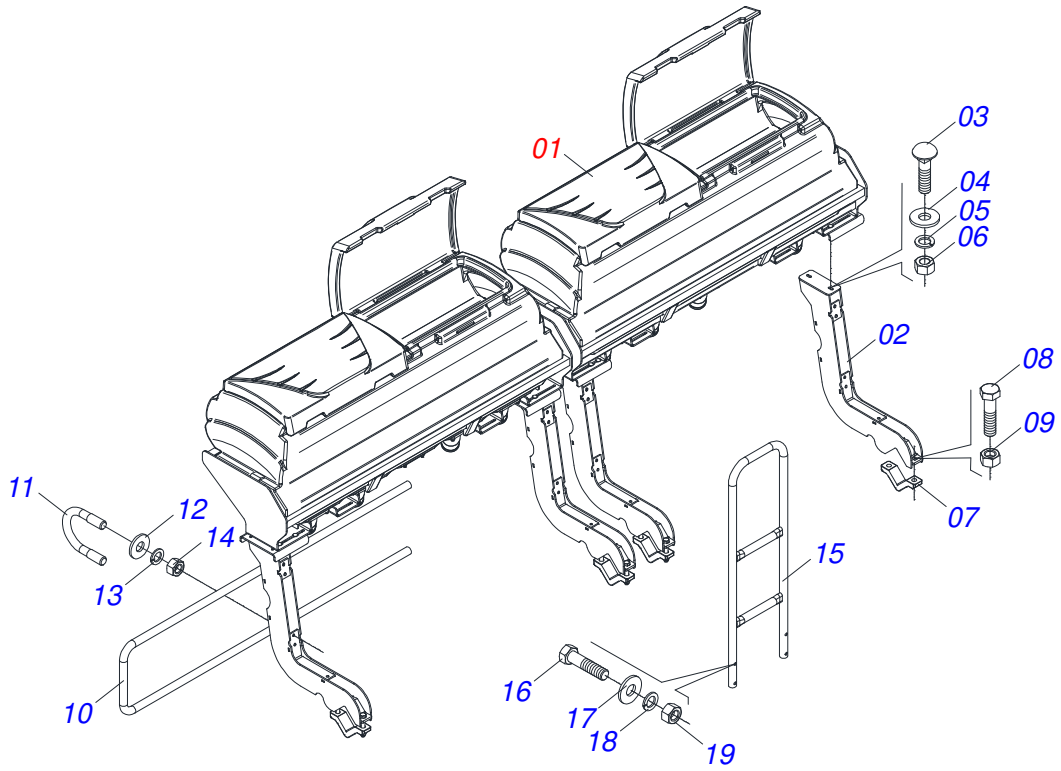

Item	Code	Description	See page	QT
01	0511058828	2 BOXES WITH 9 CONDUCTORS ASSEMBLY	78	01
02	0521066102	TOWER SUPPORT HOPPER		04
03	0501010942	3/8" X 1-1/4" BOLT		08
04	0501010984	FLAT WASHER		08
05	0503010025	3/8" SPRING WASHER		08
06	0503010026	3/8" NUT		08
07	0502010175	HITCH CLAMP		04
08	0501011543	5/8" X 4" BOLT		08
09	0503012412	5/8 UNC SELF LOCKING NUT		08
10	0571019393	PROTECTOR		02
11	0551019884	45 X 50 X 3/8 FASTENER		08
12	0501010453	FLAT WASHER		16
13	0503010025	3/8" SPRING WASHER		16
14	0503010026	3/8" NUT		16
15	0521066211	PROTECTOR CENTRAL		01
16	0503011172	BOLT 1/2 UNC X 2.1/2 C S G.5 ZN		04
17	0501013519	FLAT WASHER		04
18	0503010019	1/2" SPRING WASHER		04
19	0503010060	1/2" NUT		04

2 BOXES WITH 9 CONDUCTORS ASSEMBLY

0511058828

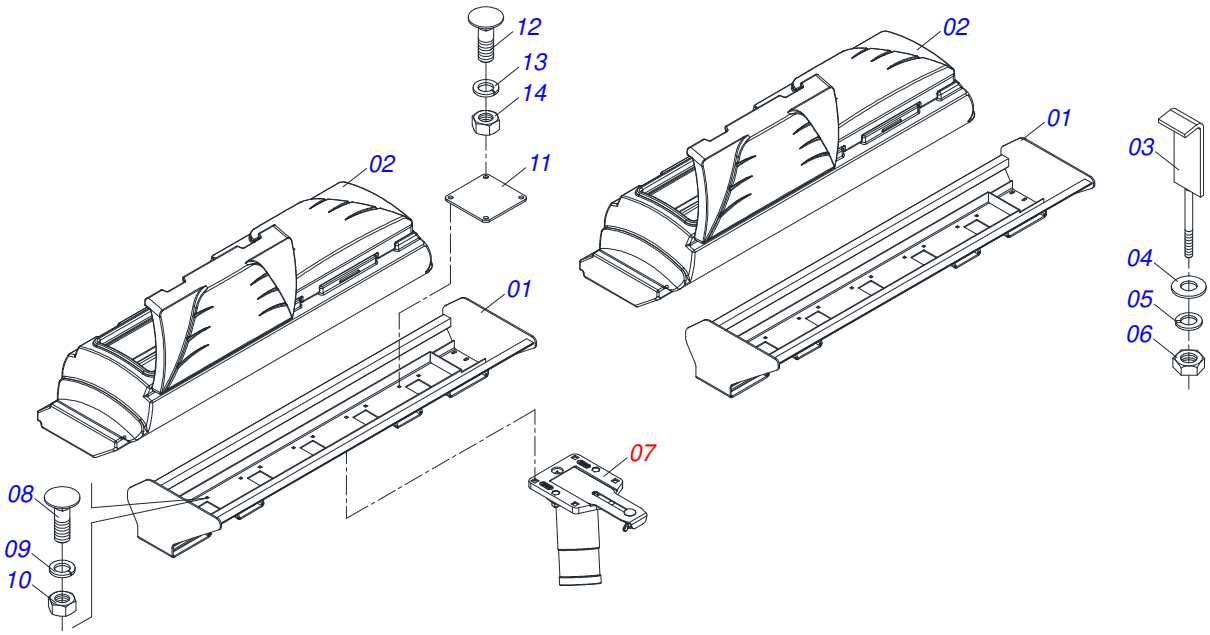

Item	Code	Description	See page	QT
01	0521064748	05 NOZZLES SINGLE SEED BOX SUPPORT		02
02	0503061987	05 NOZZLES FERTILIZER BOX		02
03	0521063401	SEED BOX ONLY FIXING LOCK		04
04	0501010984	FLAT WASHER		04
05	0503010025	3/8" SPRING WASHER		04
06	0503010026	3/8" NUT		04
07	0511057690	3" ARTICULATED SEED CONDUCTOR	95	09
08	0501010942	3/8" X 1-1/4" BOLT		36
09	0503010025	3/8" SPRING WASHER		36
10	0503010026	3/8" NUT		36
11	0571015773	SUPPORT SEED		01
12	0501011643	3/8 X 1"BOLT		04
13	0503010025	3/8" SPRING WASHER		04
14	0503010026	3/8" NUT		04

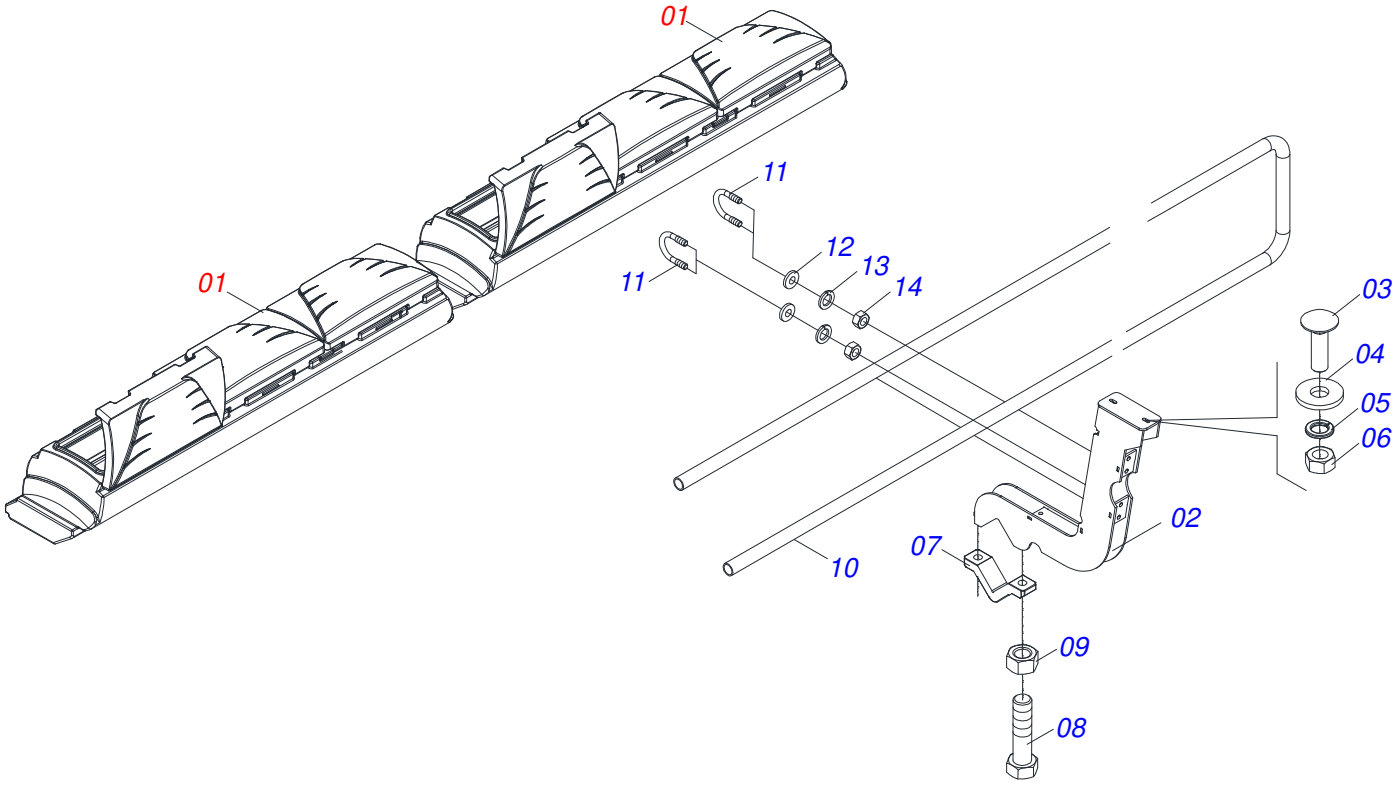

Item	Code	Description	See page	QT
01	0511058100	2 BOXES WITH 9 CONDUCTORS ASSEMBLY	80	01
02	0521066102	TOWER SUPPORT HOPPER		04
03	0501010942	3/8" X 1-1/4" BOLT		08
04	0501010984	FLAT WASHER		08
05	0503010025	3/8" SPRING WASHER		08
06	0503010026	3/8" NUT		08
07	0502010175	HITCH CLAMP		04
08	0501011543	5/8" X 4" BOLT		08
09	0503012412	5/8 UNC SELF LOCKING NUT		08
10	0571019394	PROTECTOR		02
11	0551019884	45 X 50 X 3/8 FASTENER		08
12	0501010453	FLAT WASHER		16
13	0503010025	3/8" SPRING WASHER		16
14	0503010026	3/8" NUT		16

2 BOXES WITH 9 CONDUCTORS ASSEMBLY

0511058100

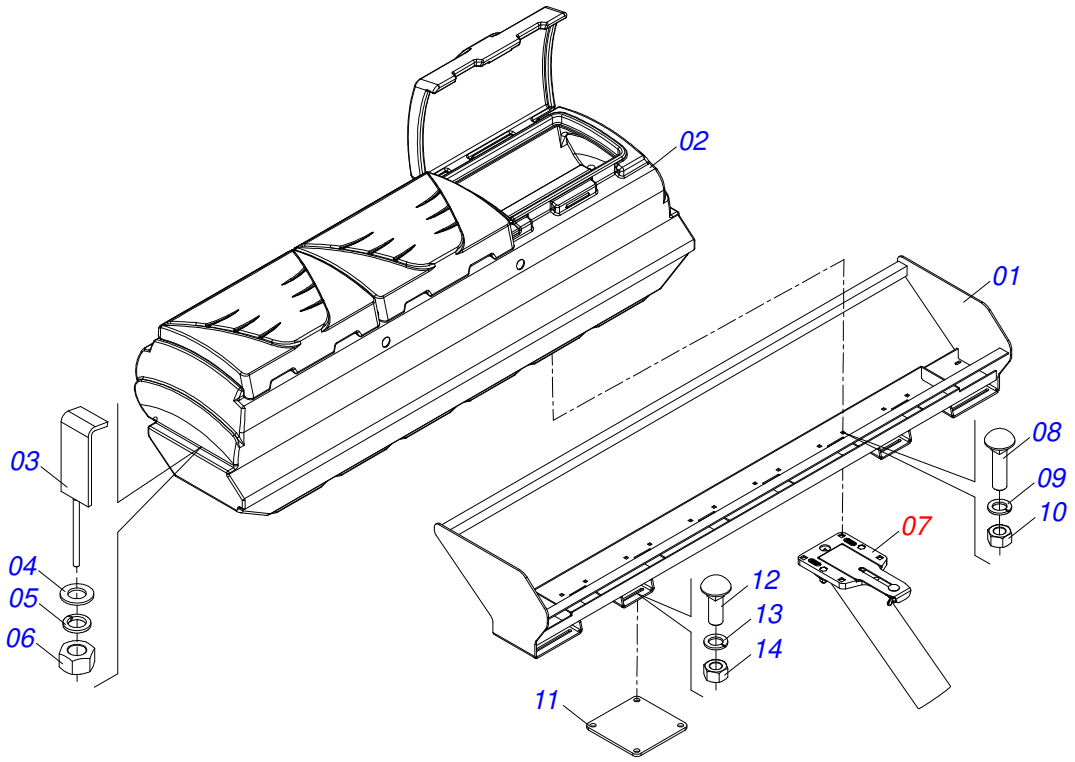

Item	Code	Description	See page	QT
01	0521064813	SINGLE SEED BOX SUPPORT - 06 NOZZLES		02
02	0503061899	REAR BEAN FERTILIZER ASSY		02
03	0521063401	SEED BOX ONLY FIXING LOCK		04
04	0501010984	FLAT WASHER		04
05	0503010025	3/8" SPRING WASHER		04
06	0503010026	3/8" NUT		04
07	0511057690	3" ARTICULATED SEED CONDUCTOR	95	09
08	0501010942	3/8" X 1-1/4" BOLT		36
09	0503010025	3/8" SPRING WASHER		36
10	0503010026	3/8" NUT		36
11	0571015773	SUPPORT SEED		03
12	0501011643	3/8 X 1"BOLT		12
13	0503010025	3/8" SPRING WASHER		12
14	0503010026	3/8" NUT		12

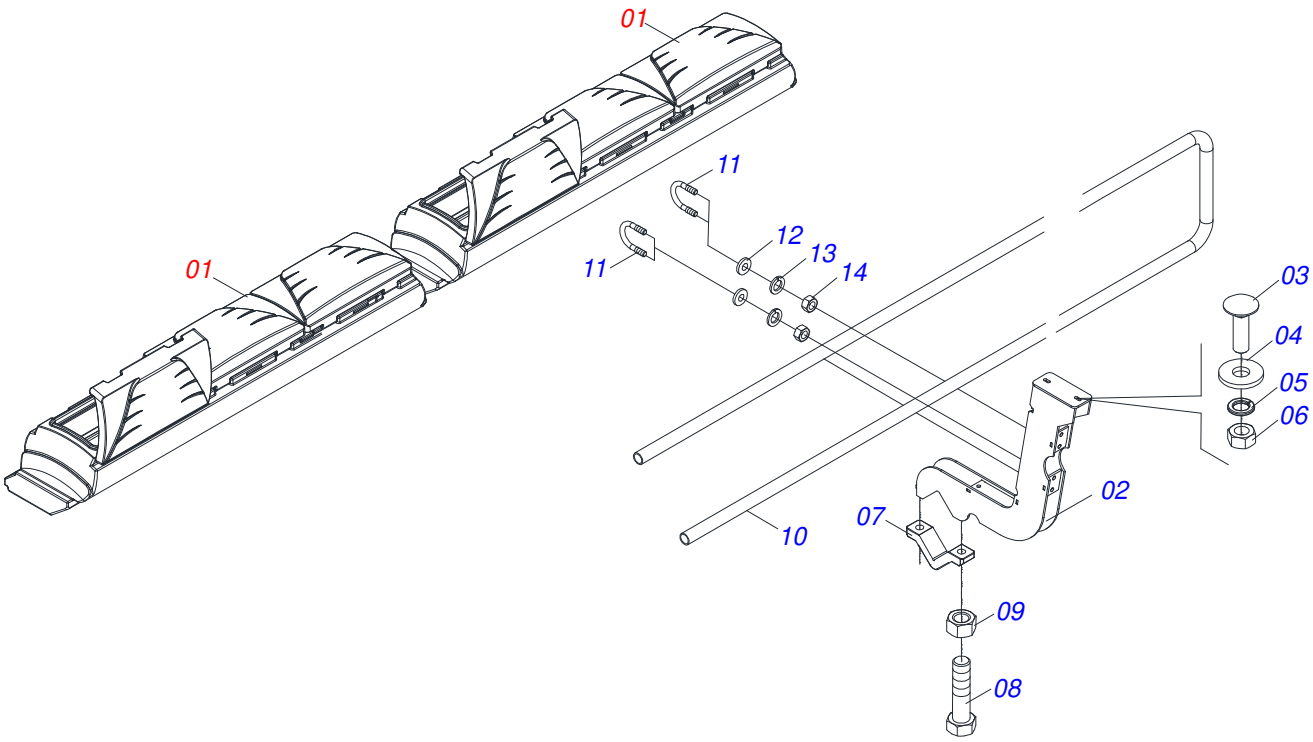

Item	Code	Description	See page	QT
01	0511059584	2 BOXES WITH 10 CONDUCTORS ASSEMBLY	82	01
02	0521066102	TOWER SUPPORT HOPPER		04
03	0501010942	3/8" X 1-1/4" BOLT		08
04	0501010984	FLAT WASHER		08
05	0503010025	3/8" SPRING WASHER		08
06	0503010026	3/8" NUT		08
07	0502010175	HITCH CLAMP		04
08	0501011543	5/8" X 4" BOLT		08
09	0503012412	5/8 UNC SELF LOCKING NUT		08
10	0571019394	PROTECTOR		02
11	0551019884	45 X 50 X 3/8 FASTENER		08
12	0501010453	FLAT WASHER		16
13	0503010025	3/8" SPRING WASHER		16
14	0503010026	3/8" NUT		16

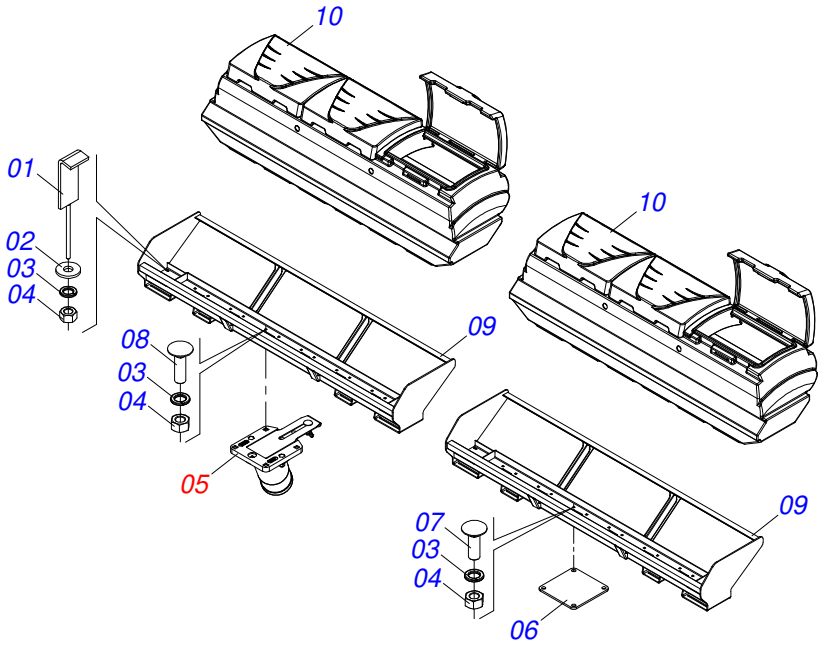

Item	Code	Description	See page	QT
01	0521063401	SEED BOX ONLY FIXING LOCK		04
02	0501010984	FLAT WASHER		04
03	0503010025	3/8" SPRING WASHER		52
04	0503010026	3/8" NUT		52
05	0511057690	3" ARTICULATED SEED CONDUCTOR	95	10
06	0571015773	SUPPORT SEED		02
07	0501011643	3/8 X 1"BOLT		08
08	0501010942	3/8" X 1-1/4" BOLT		40
09	0521064813	SINGLE SEED BOX SUPPORT - 06 NOZZLES		02
10	0503061899	REAR BEAN FERTILIZER ASSY		02

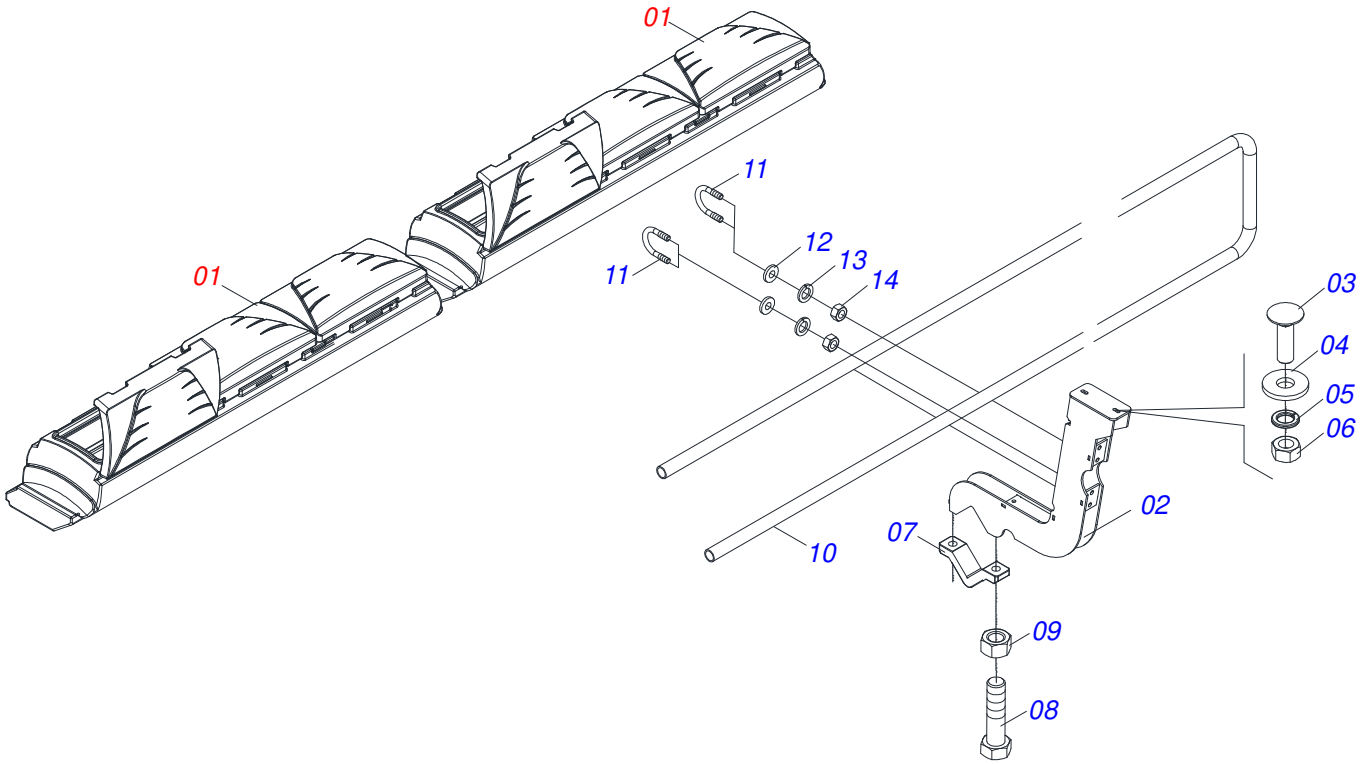

Item	Code	Description	See page	QT
01	0511059771	2 BOXES WITH 6 CONDUCTORS ASSEMBLY	84	01
02	0521066102	TOWER SUPPORT HOPPER		04
03	0501010942	3/8" X 1-1/4" BOLT		08
04	0501010984	FLAT WASHER		08
05	0503010025	3/8" SPRING WASHER		08
06	0503010026	3/8" NUT		08
07	0502010175	HITCH CLAMP		04
08	0501011543	5/8" X 4" BOLT		08
09	0503012412	5/8 UNC SELF LOCKING NUT		08
10	0571019395	PROTECTOR		02
11	0551019884	45 X 50 X 3/8 FASTENER		08
12	0501010453	FLAT WASHER		16
13	0503010025	3/8" SPRING WASHER		16
14	0503010026	3/8" NUT		16

2 BOXES WITH 6 CONDUCTORS ASSEMBLY

0511059771

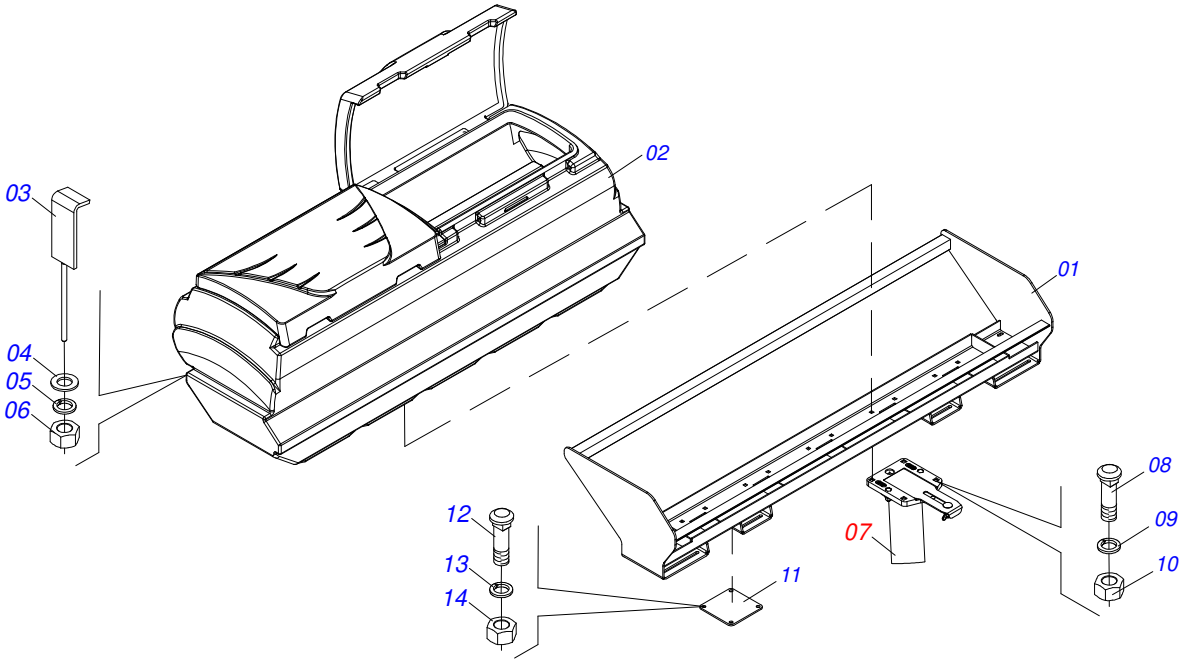

Item	Code	Description	See page	QT
001	0521064874	07 MOUTHS SUPPORT BOX SEED ONLY		02
002	0503062165	HOPPER FERTILIZER 07 MOUTHS FRONT		02
003	0521063401	SEED BOX ONLY FIXING LOCK		04
004	0501010984	FLAT WASHER		04
005	0503010025	3/8" SPRING WASHER		04
006	0503010026	3/8" NUT		04
007	0511057690	3" ARTICULATED SEED CONDUCTOR	95	06
008	0501010942	3/8" X 1-1/4" BOLT		24
009	0503010025	3/8" SPRING WASHER		24
010	0503010026	3/8" NUT		24
011	0571015773	SUPPORT SEED		08
012	0501011643	3/8 X 1"BOLT		32
013	0503010025	3/8" SPRING WASHER		32
014	0503010026	3/8" NUT		32

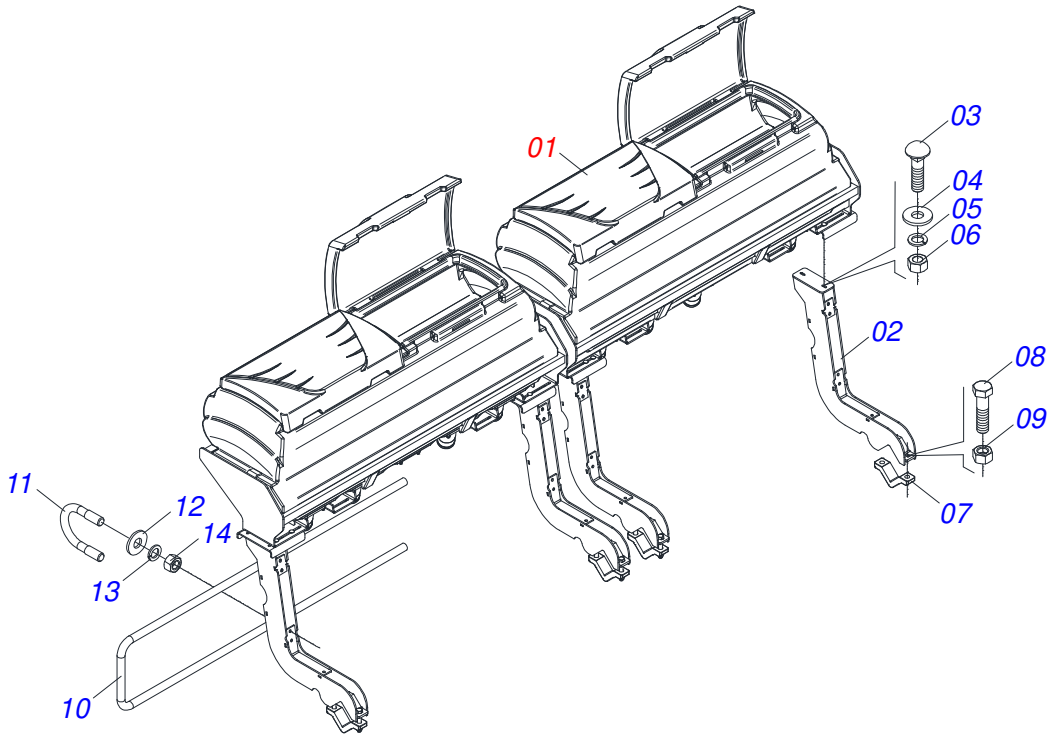

Item	Code	Description	See page	QT
001	0511057737	2 BOXES WITH 10 CONDUCTORS ASSEMBLY	86	01
002	0521066102	TOWER SUPPORT HOPPER		04
003	0501010942	3/8" X 1-1/4" BOLT		08
004	0501010984	FLAT WASHER		08
005	0503010025	3/8" SPRING WASHER		08
006	0503010026	3/8" NUT		08
007	0502010175	HITCH CLAMP		04
008	0501011543	5/8" X 4" BOLT		08
009	0503012412	5/8 UNC SELF LOCKING NUT		08
010	0571019395	PROTECTOR		02
011	0551019884	45 X 50 X 3/8 FASTENER		08
012	0501010453	FLAT WASHER		16
013	0503010025	3/8" SPRING WASHER		16
014	0503010026	3/8" NUT		16

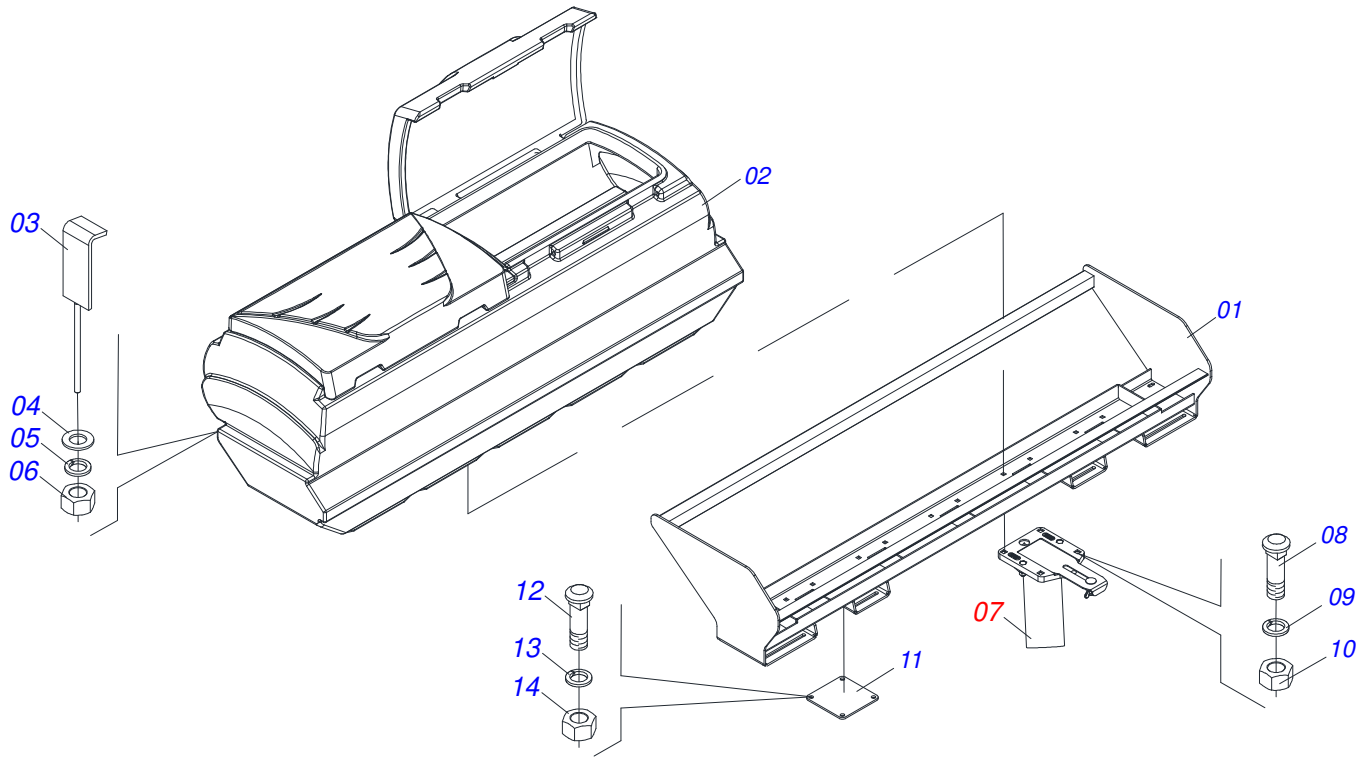

Item	Code	Description	See page	QT
01	0521064874	07 MOUTHS SUPPORT BOX SEED ONLY		02
02	0503062165	HOPPER FERTILIZER 07 MOUTHS FRONT		02
03	0521063401	SEED BOX ONLY FIXING LOCK		04
04	0501010984	FLAT WASHER		04
05	0503010025	3/8" SPRING WASHER		04
06	0503010026	3/8" NUT		04
07	0511057690	3" ARTICULATED SEED CONDUCTOR	95	10
08	0501010942	3/8" X 1-1/4" BOLT		40
09	0503010025	3/8" SPRING WASHER		40
10	0503010026	3/8" NUT		40
11	0571015773	SUPPORT SEED		04
12	0501011643	3/8 X 1"BOLT		16
13	0503010025	3/8" SPRING WASHER		16
14	0503010026	3/8" NUT		16

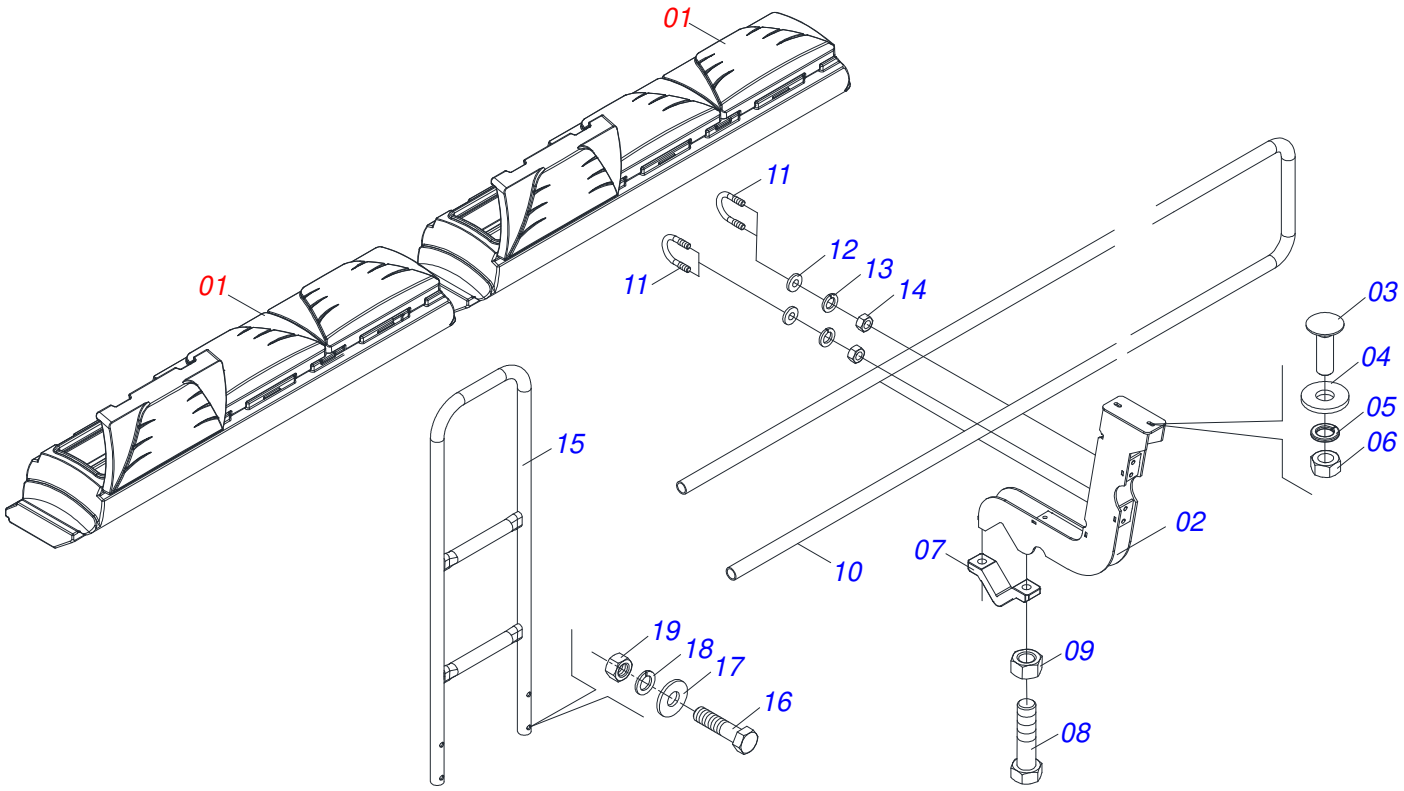

Item	Code	Description	See page	QT
001	0511057919	2 BOXES WITH 11 CONDUCTORS ASSEMBLY	88	01
002	0521066102	TOWER SUPPORT HOPPER		04
003	0501010942	3/8" X 1-1/4" BOLT		08
004	0501010984	FLAT WASHER		08
005	0503010025	3/8" SPRING WASHER		08
006	0503010026	3/8" NUT		08
007	0502010175	HITCH CLAMP		04
008	0501011543	5/8" X 4" BOLT		08
009	0503012412	5/8 UNC SELF LOCKING NUT		08
010	0571019395	PROTECTOR		02
011	0551019884	45 X 50 X 3/8 FASTENER		08
012	0501010453	FLAT WASHER		16
013	0503010025	3/8" SPRING WASHER		16
014	0503010026	3/8" NUT		16
015	0521066211	PROTECTOR CENTRAL		01
016	0503011172	BOLT 1/2 UNC X 2.1/2 C S G.5 ZN		04
017	0501013519	FLAT WASHER		04
018	0503010019	1/2" SPRING WASHER		04
019	0503010060	1/2" NUT		04

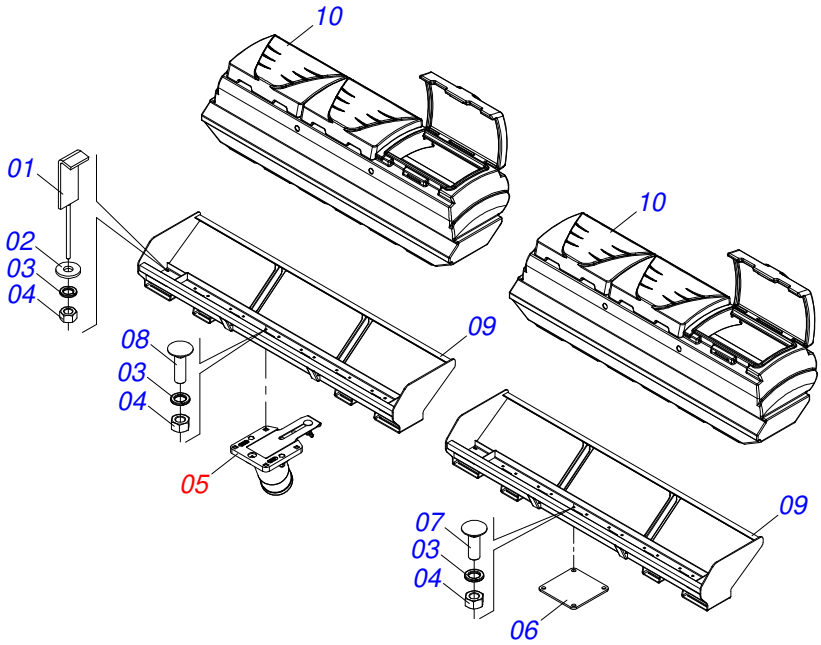

Item	Code	Description	See page	QT
01	0521063401	SEED BOX ONLY FIXING LOCK		04
02	0501010984	FLAT WASHER		04
03	0503010025	3/8" SPRING WASHER		60
04	0503010026	3/8" NUT		60
05	0511057690	3" ARTICULATED SEED CONDUCTOR	95	11
06	0571015773	SUPPORT SEED		03
07	0501011643	3/8 X 1"BOLT		12
08	0501010942	3/8" X 1-1/4" BOLT		44
09	0521064874	07 MOUTHS SUPPORT BOX SEED ONLY		02
10	0503062165	HOPPER FERTILIZER 07 MOUTHS FRONT		02

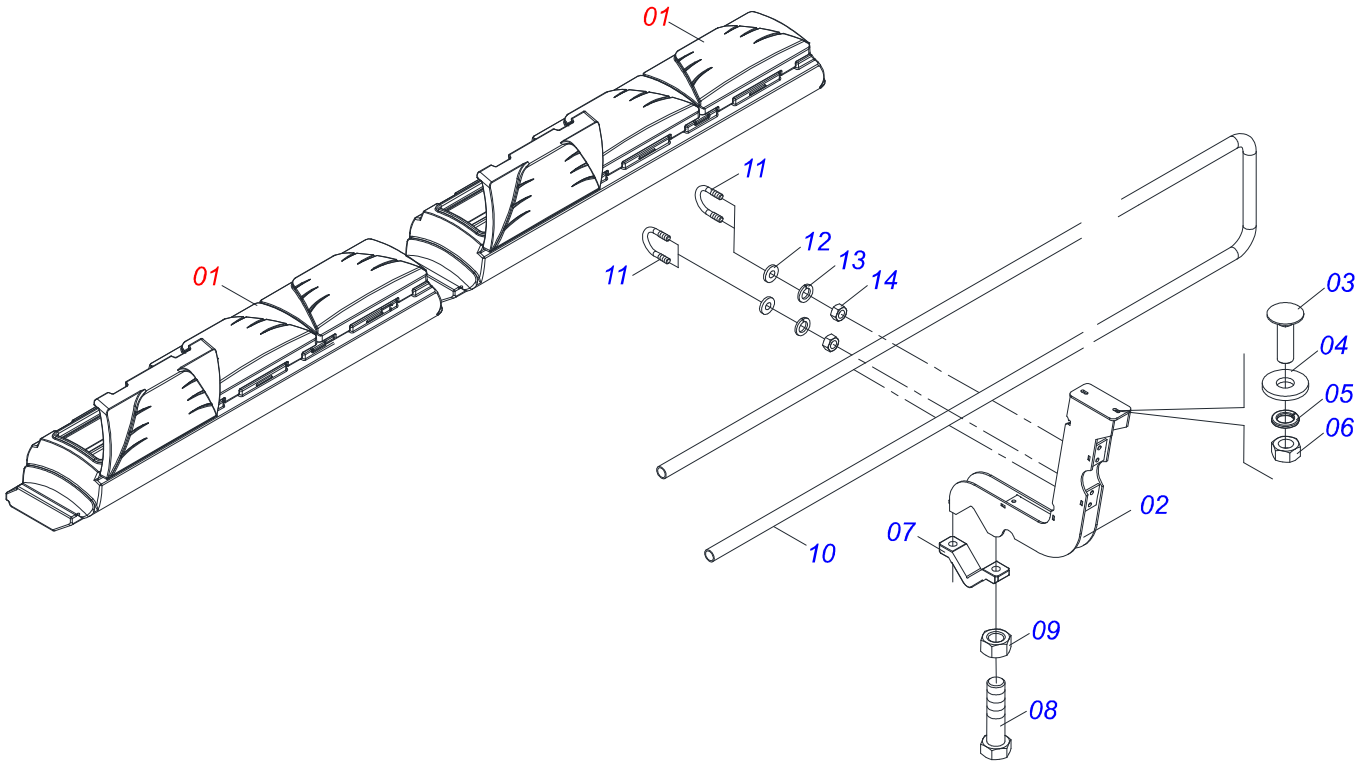

Item	Code	Description	See page	QT
01	0511058724	2 BOXES WITH 12 CONDUCTORS ASSEMBLY	90	01
02	0521066102	TOWER SUPPORT HOPPER		04
03	0501010942	3/8" X 1-1/4" BOLT		08
04	0501010984	FLAT WASHER		08
05	0503010025	3/8" SPRING WASHER		08
06	0503010026	3/8" NUT		08
07	0502010175	HITCH CLAMP		04
08	0501011543	5/8" X 4" BOLT		08
09	0503012412	5/8 UNC SELF LOCKING NUT		08
10	0571019395	PROTECTOR		02
11	0551019884	45 X 50 X 3/8 FASTENER		08
12	0501010453	FLAT WASHER		16
13	0503010025	3/8" SPRING WASHER		16
14	0503010026	3/8" NUT		16

2 BOXES WITH 12 CONDUCTORS ASSEMBLY

0511058724

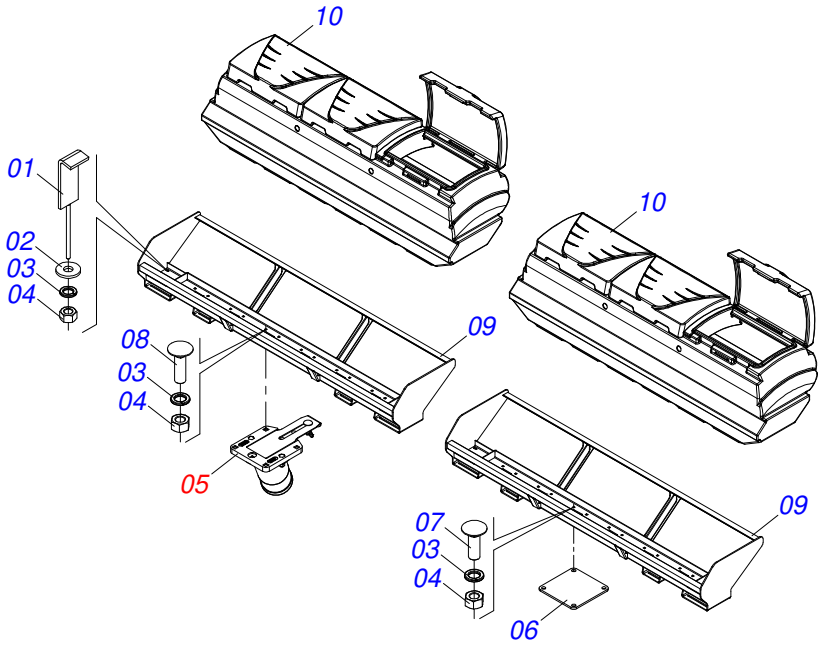

Item	Code	Description	See page	QT
01	0521063401	SEED BOX ONLY FIXING LOCK		04
02	0501010984	FLAT WASHER		04
03	0503010025	3/8" SPRING WASHER		60
04	0503010026	3/8" NUT		60
05	0511057690	3" ARTICULATED SEED CONDUCTOR	95	12
06	0571015773	SUPPORT SEED		02
07	0501011643	3/8 X 1"BOLT		08
08	0501010942	3/8" X 1-1/4" BOLT		48
09	0521064874	07 MOUTHS SUPPORT BOX SEED ONLY		02
10	0503062165	HOPPER FERTILIZER 07 MOUTHS FRONT		02

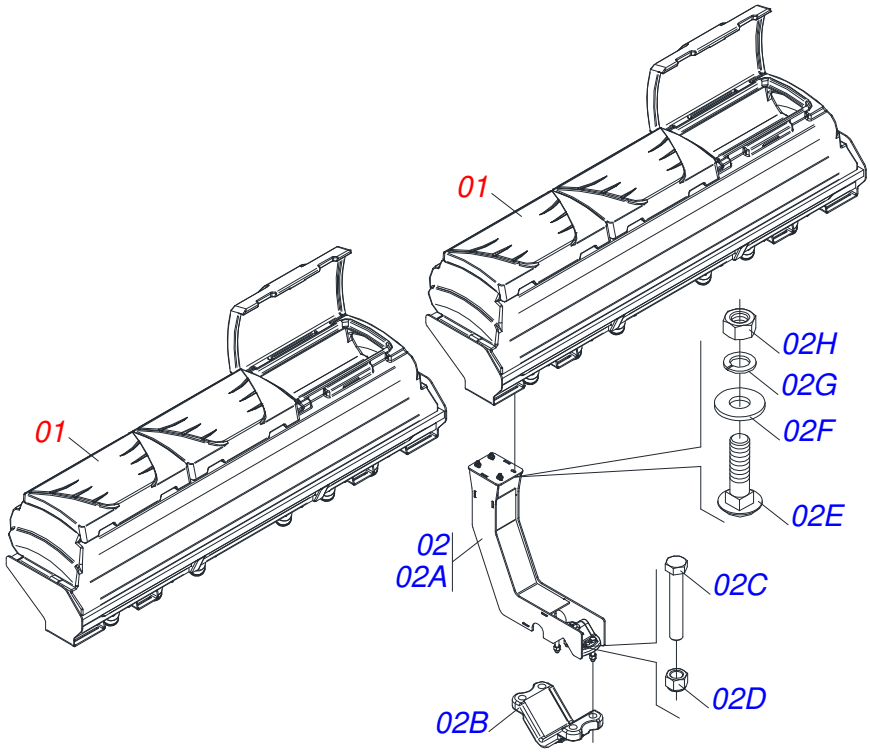

Item	Code	Description	See page	QT
001	0511058724	2 BOXES WITH 12 CONDUCTORS ASSEMBLY	90	01
002	0511058510	FIXER SUPPORT	94	04
002A	0521067305	FIXER SUPPORT		01
002B	0502012789	FIXER SUPPORT FERTILIZER ROW		01
002C	0503017857	BOLT 5/8 UNF 4		04
002D	0503010811	5/8" UNF SELF ADJUSTING NUT		04
002E	0501010942	3/8" X 1-1/4" BOLT		04
002F	0501010984	FLAT WASHER		04
002G	0503010025	3/8" SPRING WASHER		04
002H	0503010026	3/8" NUT		04

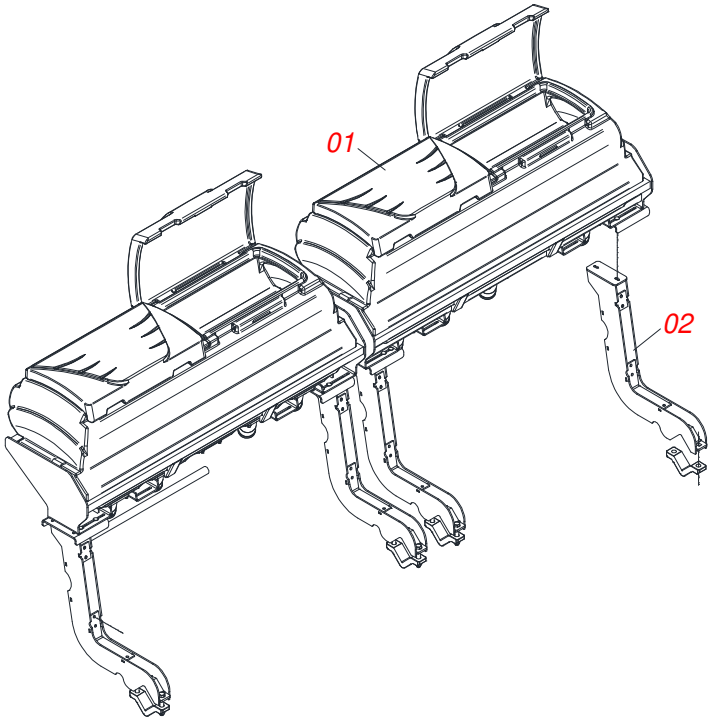

Item	Code	Description	See page	QT
001	0511058802	2 BOXES WITH 13 CONDUCTORS ASSEMBLY	93	01
002	0511058510	FIXER SUPPORT	94	04

2 BOXES WITH 13 CONDUCTORS ASSEMBLY

0511058802

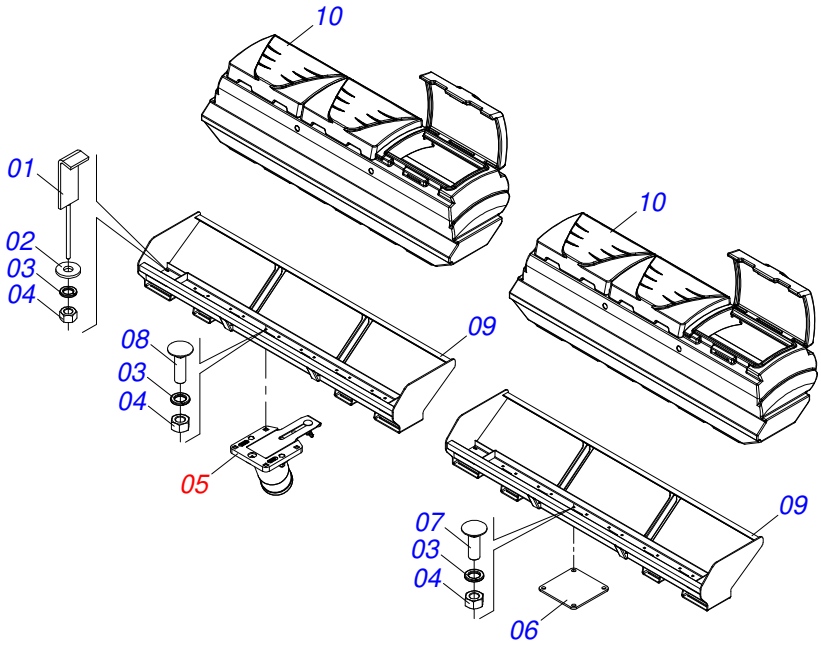

Item	Code	Description	See page	QT
01	0521063401	SEED BOX ONLY FIXING LOCK		04
02	0501010984	FLAT WASHER		04
03	0503010025	3/8" SPRING WASHER		60
04	0503010026	3/8" NUT		60
05	0511057690	3" ARTICULATED SEED CONDUCTOR	95	13
06	0571015773	SUPPORT SEED		01
07	0501011643	3/8 X 1"BOLT		04
08	0501010942	3/8" X 1-1/4" BOLT		52
09	0521064874	07 MOUTHS SUPPORT BOX SEED ONLY		02
10	0503062165	HOPPER FERTILIZER 07 MOUTHS FRONT		02

FIXER SUPPORT

0511058510

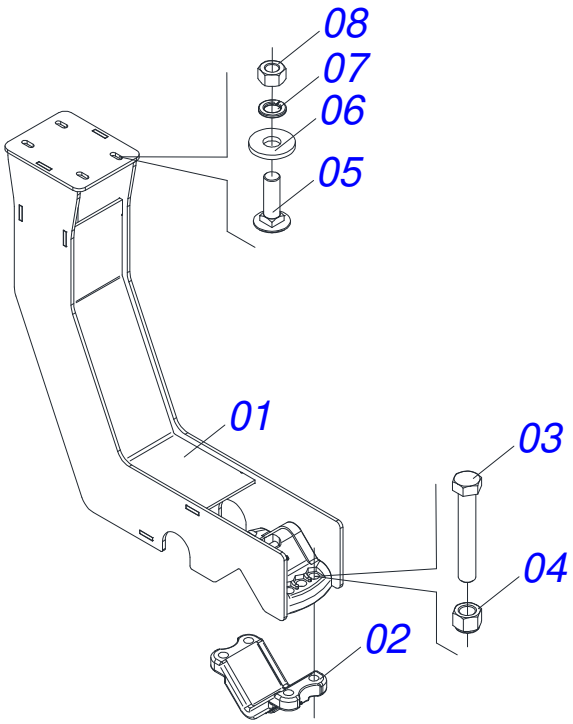

Item	Code	Description	See page	QT
01	0521067305	FIXER SUPPORT		01
02	0502012789	FIXER SUPPORT FERTILIZER ROW		01
03	0503017857	BOLT 5/8 UNF 4		04
04	0503010811	5/8" UNF SELF ADJUSTING NUT		04
05	0501010942	3/8" X 1-1/4" BOLT		04
06	0501010984	FLAT WASHER		04
07	0503010025	3/8" SPRING WASHER		04
08	0503010026	3/8" NUT		04

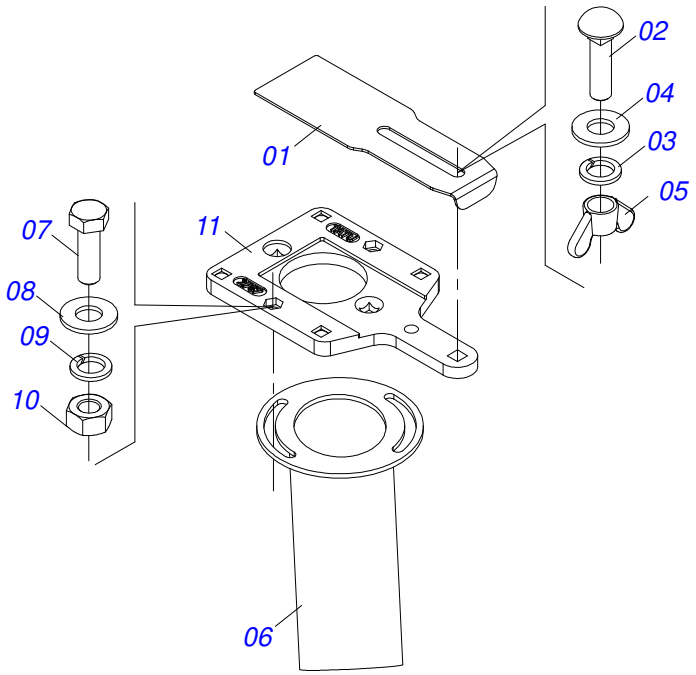

Item	Code	Description	See page	QT
01	0571015779	COVER SUPPORT CONDUCTOR ARTICULATION		01
02	0501010942	3/8" X 1-1/4" BOLT		01
03	0503010025	3/8" SPRING WASHER		01
04	0501010984	FLAT WASHER		01
05	0503010209	3/8" UNC BUTTERFLY NUT		01
06	0521066332	CONDUCTOR WITH FLANGE		01
07	0503010371	5/16" X 1" BOLT		02
08	0501010694	FLAT WASHER		02
09	0503010179	LOCK WASHER		02
10	0503010337	5/16" NUT		02
11	0502012767	FIXER CONDUCTOR SEED CSU SUPPORT		01

ROW SEED BEARING

0521055338

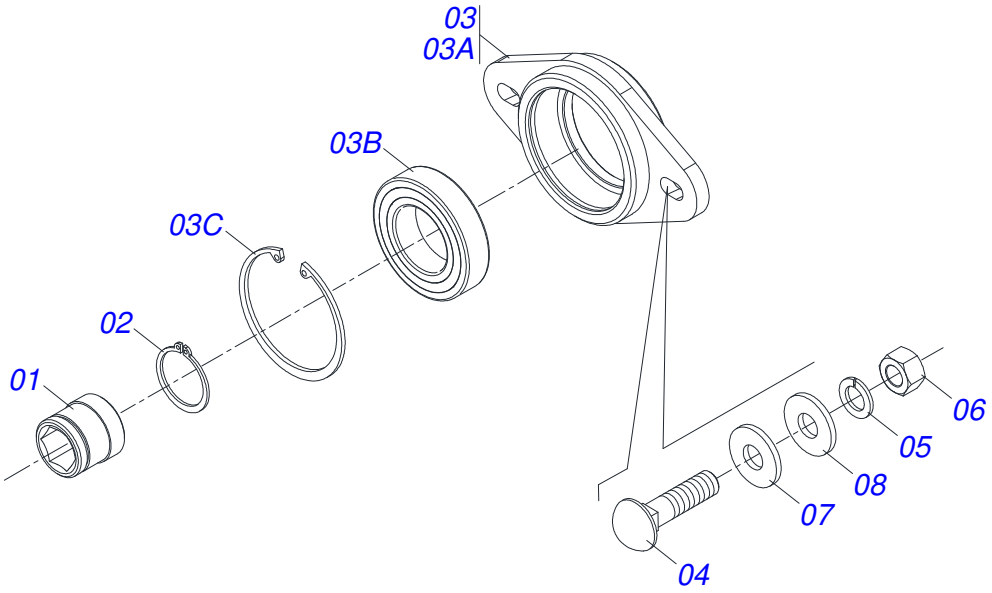

Item	Code	Description	See page	QT
01	0551015804	BEARING AXLE BODY		01
02	0503010707	501030 CLAMPING RING (FOR AXLE)		01
03	0501053566	ROW SEED BEARING	97	01
03A	0502012030	HOUSING BEARING		01
03B	0503012861	6006 2RS BALL BEARING		01
03C	0503012858	502075 CLAMPING RING (FOR HOLE)		01
04	0503011953	5/16" X 1" BOLT		02
05	0503010179	LOCK WASHER		02
06	0503010337	5/16" NUT		02
07	0501013518	FLAT WASHER		02
08	0501010694	FLAT WASHER		02

ROW SEED BEARING

0501053566

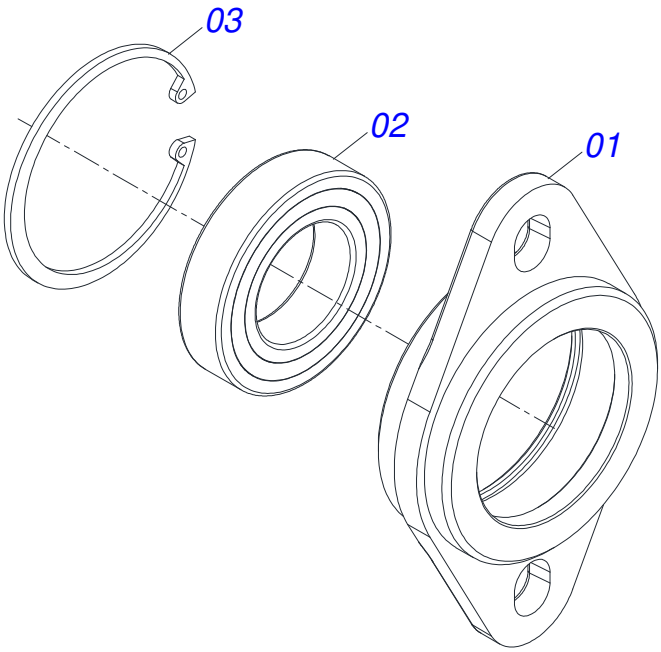

Item	Code	Description	See page	QT
01	0502012030	HOUSING BEARING		01
02	0503012861	6006 2RS BALL BEARING		01
03	0503012858	502075 CLAMPING RING (FOR HOLE)		01

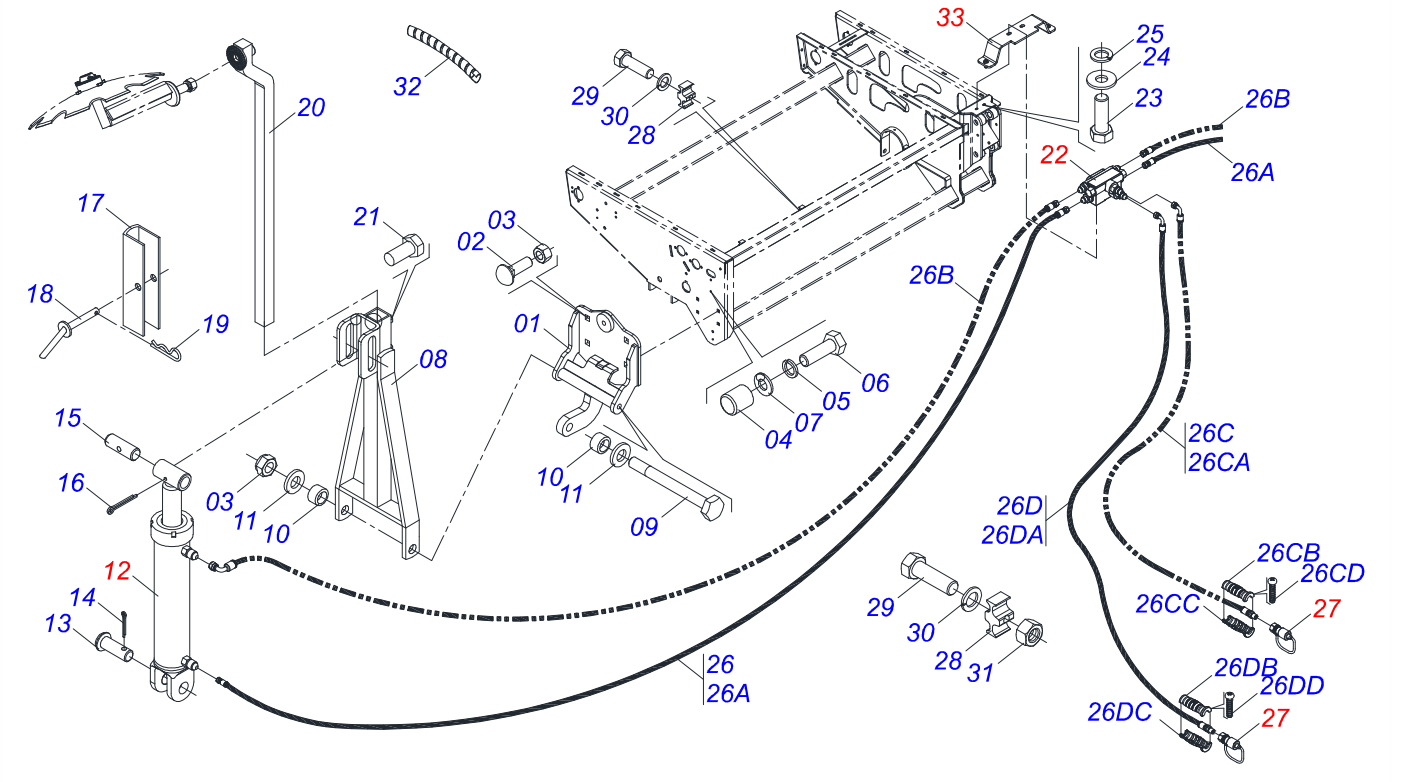

Item	Code	Description	See page	QT
01	0521066622	ROW MARKER ARM SUPPORT		02
02	0503012699	BOLT 5/8NC X 2 CAPQ G.5 ZN 1K20548		04
03	0503012412	5/8 UNC SELF LOCKING NUT		06
04	0503011070	BEATER		02
05	0503010019	1/2" SPRING WASHER		02
06	0503010740	BOLT 1/2 UNC X 2 CS G.5 ZN		02
07	0551019213	FLAT WASHER		02
08	0501069470	ROW MARKER ARM		02
09	0521061655	BOLT 5/8 UNC X 320 MM		02
10	0521010479	SLEEVE ARTICULATION		04
11	0501012140	FLAT WASHER		04
12	0511058449	HYDRAULIC CYLINDER	104	02
13	0521010575	C0.9" X 3.3" COUPLING SHAFT		02
14	0503010523	1/4" X 2" COTTERPIN		02
15	0511015779	1" X 4.2" AXLE		02
16	0503010523	1/4" X 2" COTTERPIN		02
17	0511017592	11.8" X 1.6" TRANSPORT LOCK		02
18	0501068994	8,30 X 78 LOCK PIN		02
19	0503030168	HITCH PIN CLIP		02
20	0501069643	890 TURNBUCKLE		02
21	0503011854	5/8" X 1-1/4" BOLT		04
22	0501054649	HBM SEQUENTIAL VALVE	105	01
23	0503010751	C3/8" X 1.1/4" HEX BOLT G.5		02
24	0501010984	FLAT WASHER		02
25	0503010025	3/8" SPRING WASHER		02
26	0511057208	HOSE KIT MARKER HYDRAULIC		01
26A	0501080452	3/8" X 98" TR-TR HOSE		02
26B	0501080414	3/8" X 110.2" TR-TC HOSE ASSY		02
26C	0521052849	3/8 X 4200 TC-TM PURPLE/RED HOSE		01
26CA	0501080878	3/8 X 4200 TC-TM HOSE ASSY		01
26CB	0503034491	HYDRAULIC HOSE GRIP (PURPLE)		01

Item	Code	Description	See page	QT
26CC	0503034495	HYDRAULIC HOSE GRIP (RED)		01
26CD	0503018952	PLASTIC BOLT		06
26D	0521052850	3/8 X 4200 TC-TM PURPLE/BLUE HOSE		01
26DA	0501080878	3/8 X 4200 TC-TM HOSE ASSY		01
26DB	0503034491	HYDRAULIC HOSE GRIP (PURPLE)		01
26DC	0503034494	HYDRAULIC HOSE GRIP (BLUE)		01
26DD	0503018952	PLASTIC BOLT		06
27	0501053834	MALE QUICK COUPLER	107	02
28	0502012702	BODY SUPPORT CLAMP		08
29	0503012555	SCREW 7/16 UNC X 2 CS RT G.7 ZN		08
30	0503010180	7/16" SPRING WASHER		08
31	0503010244	7/16" NUT		02
32	0571014419	PLASTIC PROTECTION SPRING HOSE 3/4 X 700MM		04
33	0511058119	VALVE SUPPORT ASSEMBLY	106	01

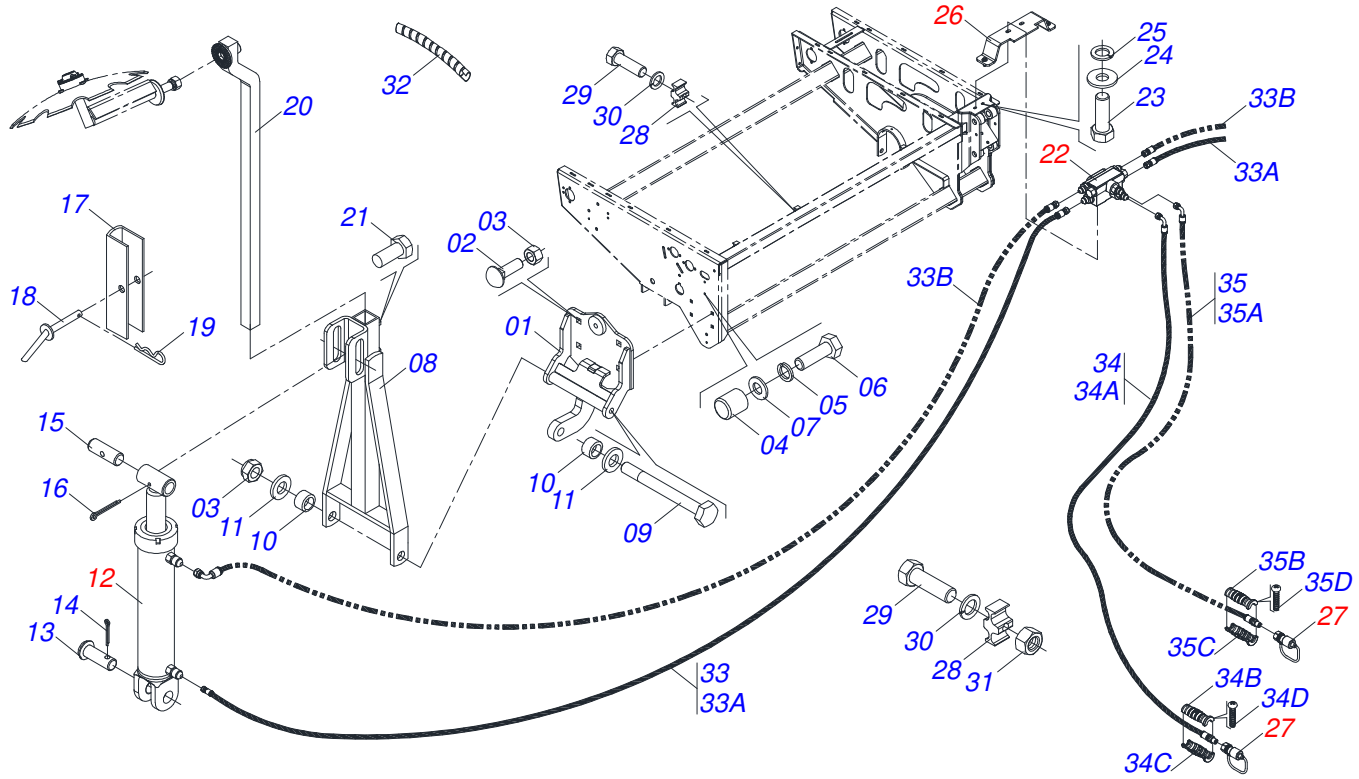

Item	Code	Description	See page	QT
01	0521066622	ROW MARKER ARM SUPPORT		02
02	0503012699	BOLT 5/8NC X 2 CAPQ G.5 ZN 1K20548		04
03	0503012412	5/8 UNC SELF LOCKING NUT		04
04	0503011070	BEATER		02
05	0503010019	1/2" SPRING WASHER		02
06	0503010740	BOLT 1/2 UNC X 2 CS G.5 ZN		02
07	0551019213	FLAT WASHER		02
08	0501069470	ROW MARKER ARM		02
09	0521061655	BOLT 5/8 UNC X 320 MM		02
10	0521010479	SLEEVE ARTICULATION		04
11	0501012140	FLAT WASHER		04
12	0511058449	HYDRAULIC CYLINDER	104	02
13	0521010575	C0.9" X 3.3" COUPLING SHAFT		02
14	0503010523	1/4" X 2" COTTERPIN		02
15	0511015779	1" X 4.2" AXLE		02
16	0503010523	1/4" X 2" COTTERPIN		02
17	0511017592	11.8" X 1.6" TRANSPORT LOCK		02
18	0501068994	8,30 X 78 LOCK PIN		02
19	0503030168	HITCH PIN CLIP		02
20	0501069643	890 TURNBUCKLE		02
21	0503011854	5/8" X 1-1/4" BOLT		04
22	0501054649	HBM SEQUENTIAL VALVE	105	01
23	0503010751	C3/8" X 1.1/4" HEX BOLT G.5		02
24	0501010984	FLAT WASHER		02
25	0503010025	3/8" SPRING WASHER		02
26	0511058119	VALVE SUPPORT ASSEMBLY	106	01
27	0501053834	MALE QUICK COUPLER	107	02
28	0502012702	BODY SUPPORT CLAMP		08
29	0503012555	SCREW 7/16 UNC X 2 CS RT G.7 ZN		08
30	0503010180	7/16" SPRING WASHER		08
31	0503010244	7/16" NUT		02

Item	Code	Description	See page	QT
32	0571014419	PLASTIC PROTECTION SPRING HOSE 3/4 X 700MM		04
33	0511057312	HOSE KIT MARKER HYDRAULIC		
33A	0501081727	TR-TR HOSE ASSY		02
33B	0501080408	HOSE 3/8 X 3200 TR-TC		02
34	0521052849	3/8 X 4200 TC-TM PURPLE/RED HOSE		01
34A	0501080878	3/8 X 4200 TC-TM HOSE ASSY		01
34B	0503034491	HYDRAULIC HOSE GRIP (PURPLE)		01
34C	0503034495	HYDRAULIC HOSE GRIP (RED)		01
34D	0503018952	PLASTIC BOLT		06
35	0521052850	3/8 X 4200 TC-TM PURPLE/BLUE HOSE		01
35A	0501080878	3/8 X 4200 TC-TM HOSE ASSY		01
35B	0503034491	HYDRAULIC HOSE GRIP (PURPLE)		01
35C	0503034494	HYDRAULIC HOSE GRIP (BLUE)		01
35D	0503018952	PLASTIC BOLT		06

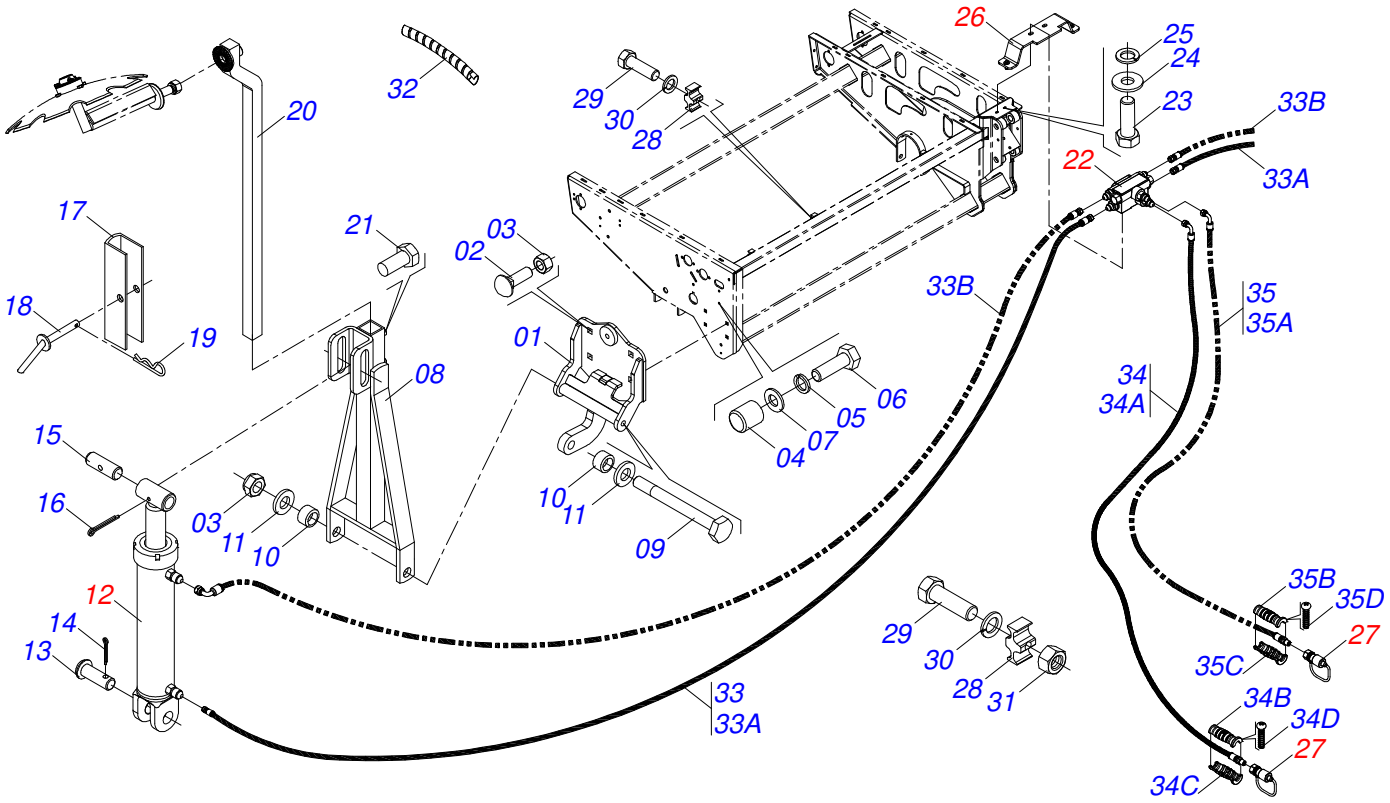

Item	Code	Description	See page	QT
01	0521066622	ROW MARKER ARM SUPPORT		02
02	0503012699	BOLT 5/8NC X 2 CAPQ G.5 ZN 1K20548		04
03	0503012412	5/8 UNC SELF LOCKING NUT		04
04	0503011070	BEATER		02
05	0503010019	1/2" SPRING WASHER		02
06	0503010740	BOLT 1/2 UNC X 2 CS G.5 ZN		02
07	0551019213	FLAT WASHER		02
08	0501069470	ROW MARKER ARM		02
09	0521061655	BOLT 5/8 UNC X 320 MM		02
10	0521010479	SLEEVE ARTICULATION		04
11	0501012140	FLAT WASHER		04
12	0511058449	HYDRAULIC CYLINDER	104	02
13	0521010575	C0.9" X 3.3" COUPLING SHAFT		02
14	0503010523	1/4" X 2" COTTERPIN		02
15	0511015779	1" X 4.2" AXLE		02
16	0503010523	1/4" X 2" COTTERPIN		02
17	0511017592	11.8" X 1.6" TRANSPORT LOCK		02
18	0501068994	8,30 X 78 LOCK PIN		02
19	0503030168	HITCH PIN CLIP		02
20	0501069643	890 TURNBUCKLE		02
21	0503011854	5/8" X 1-1/4" BOLT		04
22	0501054649	HBM SEQUENTIAL VALVE	105	01
23	0503010751	C3/8" X 1.1/4" HEX BOLT G.5		02
24	0501010984	FLAT WASHER		02
25	0503010025	3/8" SPRING WASHER		02
26	0511058119	VALVE SUPPORT ASSEMBLY	106	01
27	0501053834	MALE QUICK COUPLER	107	02
28	0502012702	BODY SUPPORT CLAMP		08
29	0503012555	SCREW 7/16 UNC X 2 CS RT G.7 ZN		08
30	0503010180	7/16" SPRING WASHER		08
31	0503010244	7/16" NUT		02

Item	Code	Description	See page	QT
32	0571014419	PLASTIC PROTECTION SPRING HOSE 3/4 X 700MM		04
33	0511057354	HOSE KIT MARKER HYDRAULIC 4395		01
33A	0501081728	HOSE 3/8 X 3100 TR-TR		02
33B	0501080515	HOSE 3/8 X 3400 TR-TC		02
34	0521052849	3/8 X 4200 TC-TM PURPLE/RED HOSE		01
34A	0501080878	3/8 X 4200 TC-TM HOSE ASSY		01
34B	0503034491	HYDRAULIC HOSE GRIP (PURPLE)		01
34C	0503034495	HYDRAULIC HOSE GRIP (RED)		01
34D	0503018952	PLASTIC BOLT		06
35	0521052850	3/8 X 4200 TC-TM PURPLE/BLUE HOSE		01
35A	0501080878	3/8 X 4200 TC-TM HOSE ASSY		01
35B	0503034491	HYDRAULIC HOSE GRIP (PURPLE)		01
35C	0503034494	HYDRAULIC HOSE GRIP (BLUE)		01
35D	0503018952	PLASTIC BOLT		06

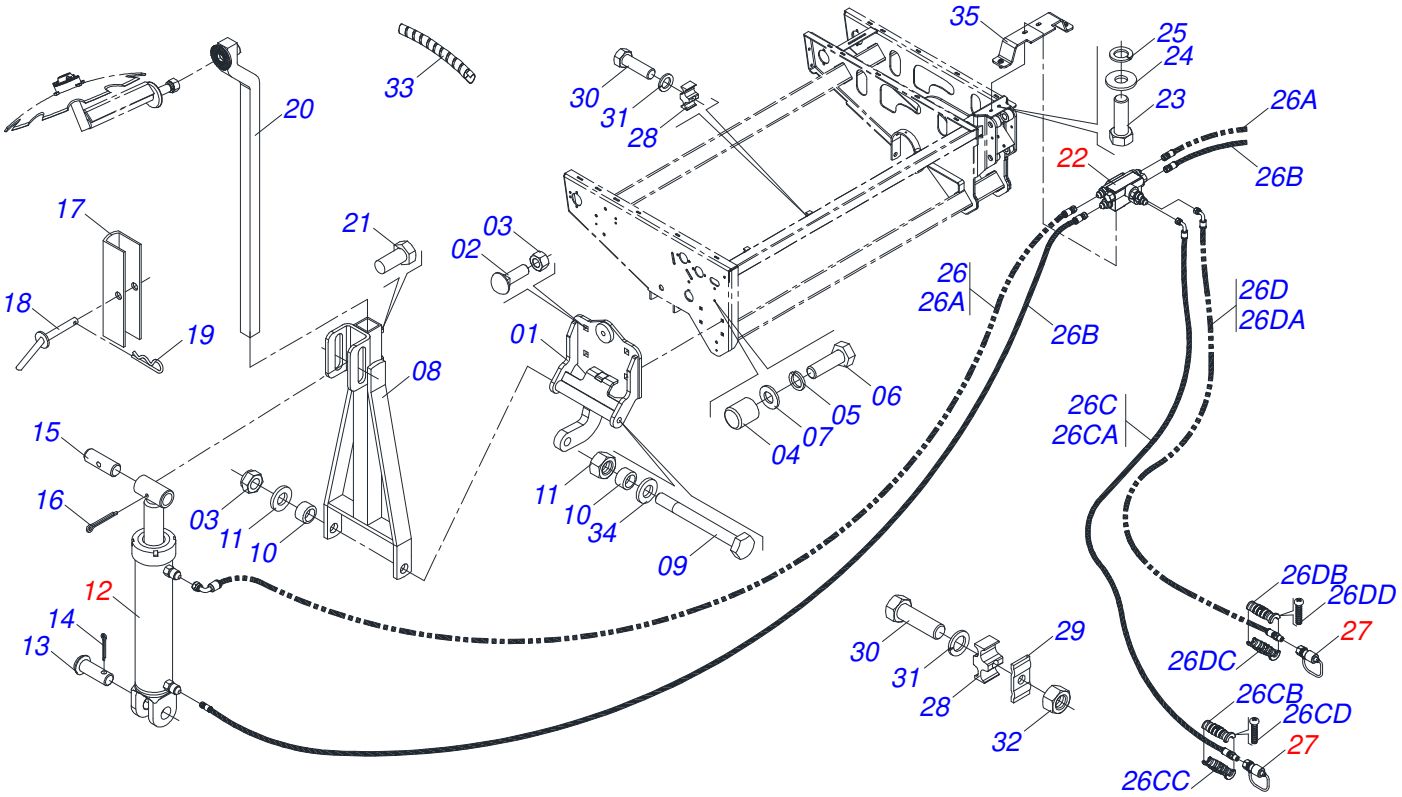

Item	Code	Description	See page	QT
01	0521066622	ROW MARKER ARM SUPPORT		02
02	0503012699	BOLT 5/8NC X 2 CAPQ G.5 ZN 1K20548		04
03	0503012412	5/8 UNC SELF LOCKING NUT		04
04	0503011070	BEATER		02
05	0503010019	1/2" SPRING WASHER		02
06	0503010740	BOLT 1/2 UNC X 2 CS G.5 ZN		02
07	0551019213	FLAT WASHER		02
08	0501069470	ROW MARKER ARM		02
09	0521061655	BOLT 5/8 UNC X 320 MM		02
10	0521010479	SLEEVE ARTICULATION		04
11	0503012412	5/8 UNC SELF LOCKING NUT		02
12	0511058449	HYDRAULIC CYLINDER	104	02
13	0521010575	C0.9" X 3.3" COUPLING SHAFT		02
14	0503010523	1/4" X 2" COTTERPIN		02
15	0511015779	1" X 4.2" AXLE		02
16	0503010523	1/4" X 2" COTTERPIN		02
17	0511017592	11.8" X 1.6" TRANSPORT LOCK		02
18	0501068994	8,30 X 78 LOCK PIN		02
19	0503030168	HITCH PIN CLIP		02
20	0501066949	1235 TURNBUCKLE		02
21	0503011854	5/8" X 1-1/4" BOLT		04
22	0501054649	HBM SEQUENTIAL VALVE	105	01
23	0503010751	C3/8" X 1.1/4" HEX BOLT G.5		02
24	0501010984	FLAT WASHER		02
25	0503010025	3/8" SPRING WASHER		02
26	0511057334	HOSE KIT MARKER HYDRAULIC		01
26A	0501080343	TR-TR HOSE ASSY		02
26B	0501080435	3/8" X 3600 TR-TC HOSE		02
26C	0521052849	3/8 X 4200 TC-TM PURPLE/RED HOSE		01
26CA	0501080878	3/8 X 4200 TC-TM HOSE ASSY		01
26CB	0503034491	HYDRAULIC HOSE GRIP (PURPLE)		01

Item	Code	Description	See page	QT
26CC	0503034495	HYDRAULIC HOSE GRIP (RED)		01
26CD	0503018952	PLASTIC BOLT		06
26D	0521052850	3/8 X 4200 TC-TM PURPLE/BLUE HOSE		01
26DA	0501080878	3/8 X 4200 TC-TM HOSE ASSY		01
26DB	0503034491	HYDRAULIC HOSE GRIP (PURPLE)		01
26DC	0503034494	HYDRAULIC HOSE GRIP (BLUE)		01
26DD	0503018952	PLASTIC BOLT		06
27	0501053834	MALE QUICK COUPLER	107	02
28	0502012702	BODY SUPPORT CLAMP		06
29	0531011180	UPPER BODY CLIP		04
30	0503012555	SCREW 7/16 UNC X 2 CS RT G.7 ZN		06
31	0503010180	7/16" SPRING WASHER		06
32	0503010244	7/16" NUT		02
33	0571014419	PLASTIC PROTECTION SPRING HOSE 3/4 X 700MM		04
34	0501012140	FLAT WASHER		04
35	0581010011	VALVE FIXING SUPPORT		01

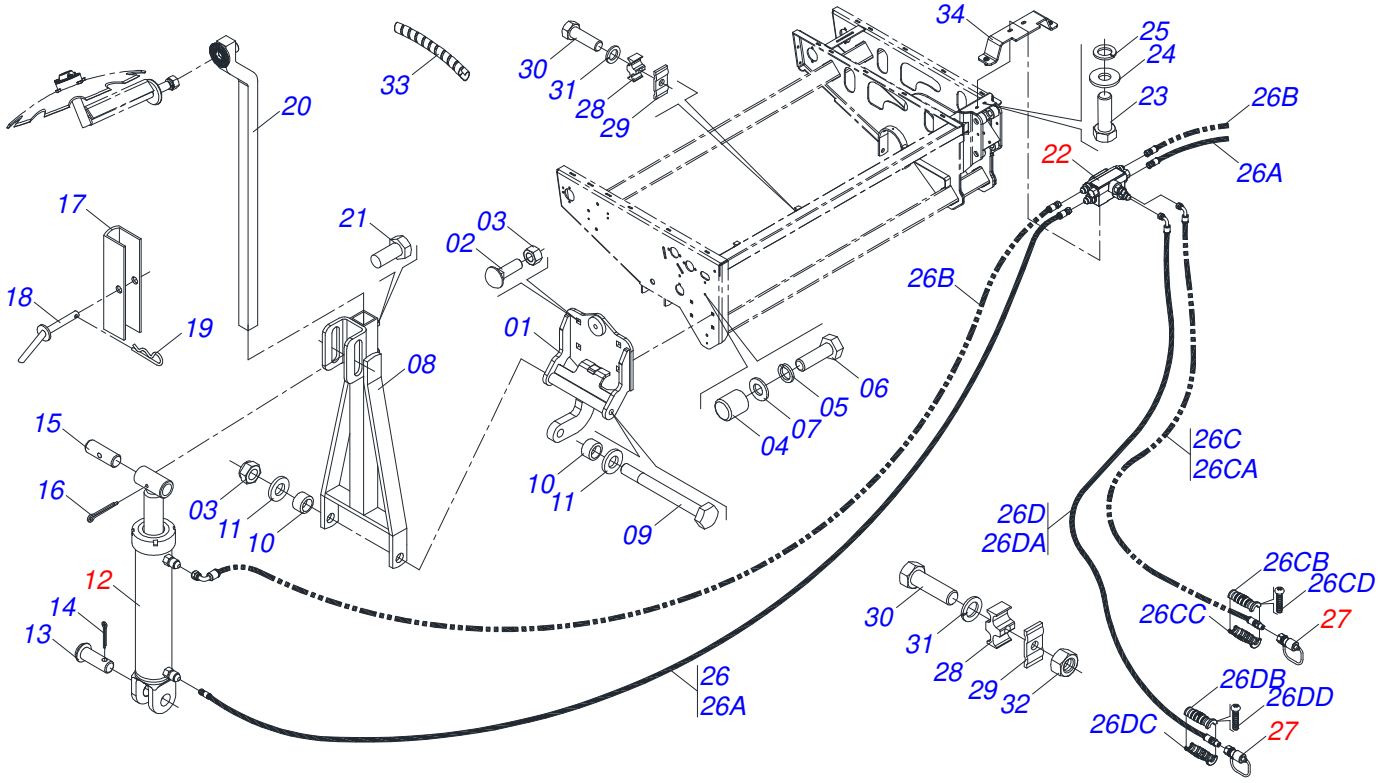

Item	Code	Description	See page	QT
01	0521066622	ROW MARKER ARM SUPPORT		02
02	0503012699	BOLT 5/8NC X 2 CAPQ G.5 ZN 1K20548		04
03	0503012412	5/8 UNC SELF LOCKING NUT		06
04	0503011070	BEATER		02
05	0503010019	1/2" SPRING WASHER		02
06	0503010740	BOLT 1/2 UNC X 2 CS G.5 ZN		02
07	0551019213	FLAT WASHER		02
08	0501069470	ROW MARKER ARM		02
09	0521061655	BOLT 5/8 UNC X 320 MM		02
10	0521010479	SLEEVE ARTICULATION		04
11	0501012140	FLAT WASHER		04
12	0511058449	HYDRAULIC CYLINDER	104	02
13	0521010575	C0.9" X 3.3" COUPLING SHAFT		02
14	0503010523	1/4" X 2" COTTERPIN		02
15	0511015779	1" X 4.2" AXLE		02
16	0503010523	1/4" X 2" COTTERPIN		02
17	0511017592	11.8" X 1.6" TRANSPORT LOCK		02
18	0501068994	8,30 X 78 LOCK PIN		02
19	0503030168	HITCH PIN CLIP		02
20	0501066949	1235 TURNBUCKLE		02
21	0503011854	5/8" X 1-1/4" BOLT		04
22	0501054649	HBM SEQUENTIAL VALVE	105	01
23	0503010751	C3/8" X 1.1/4" HEX BOLT G.5		02
24	0501010984	FLAT WASHER		02
25	0503010025	3/8" SPRING WASHER		02
26	0511057383	HOSE KIT MARKER HYDRAULIC		01
26A	0501080403	3/8" X 137" TR-TR HOSE ASSY		02
26B	0501080390	3/8" X 150" TR-TC HOSE ASSY		02
26C	0521052849	3/8 X 4200 TC-TM PURPLE/RED HOSE		01
26CA	0501080878	3/8 X 4200 TC-TM HOSE ASSY		01
26CB	0503034491	HYDRAULIC HOSE GRIP (PURPLE)		01

Item	Code	Description	See page	QT
26CC	0503034495	HYDRAULIC HOSE GRIP (RED)		01
26CD	0503018952	PLASTIC BOLT		06
26D	0521052850	3/8 X 4200 TC-TM PURPLE/BLUE HOSE		01
26DA	0501080878	3/8 X 4200 TC-TM HOSE ASSY		01
26DB	0503034491	HYDRAULIC HOSE GRIP (PURPLE)		01
26DC	0503034494	HYDRAULIC HOSE GRIP (BLUE)		01
26DD	0503018952	PLASTIC BOLT		06
27	0501053834	MALE QUICK COUPLER	107	02
28	0502012702	BODY SUPPORT CLAMP		06
29	0531011180	UPPER BODY CLIP		04
30	0503012555	SCREW 7/16 UNC X 2 CS RT G.7 ZN		06
31	0503010180	7/16" SPRING WASHER		06
32	0503010244	7/16" NUT		02
33	0571014419	PLASTIC PROTECTION SPRING HOSE 3/4 X 700MM		04
34	0581010011	VALVE FIXING SUPPORT		01

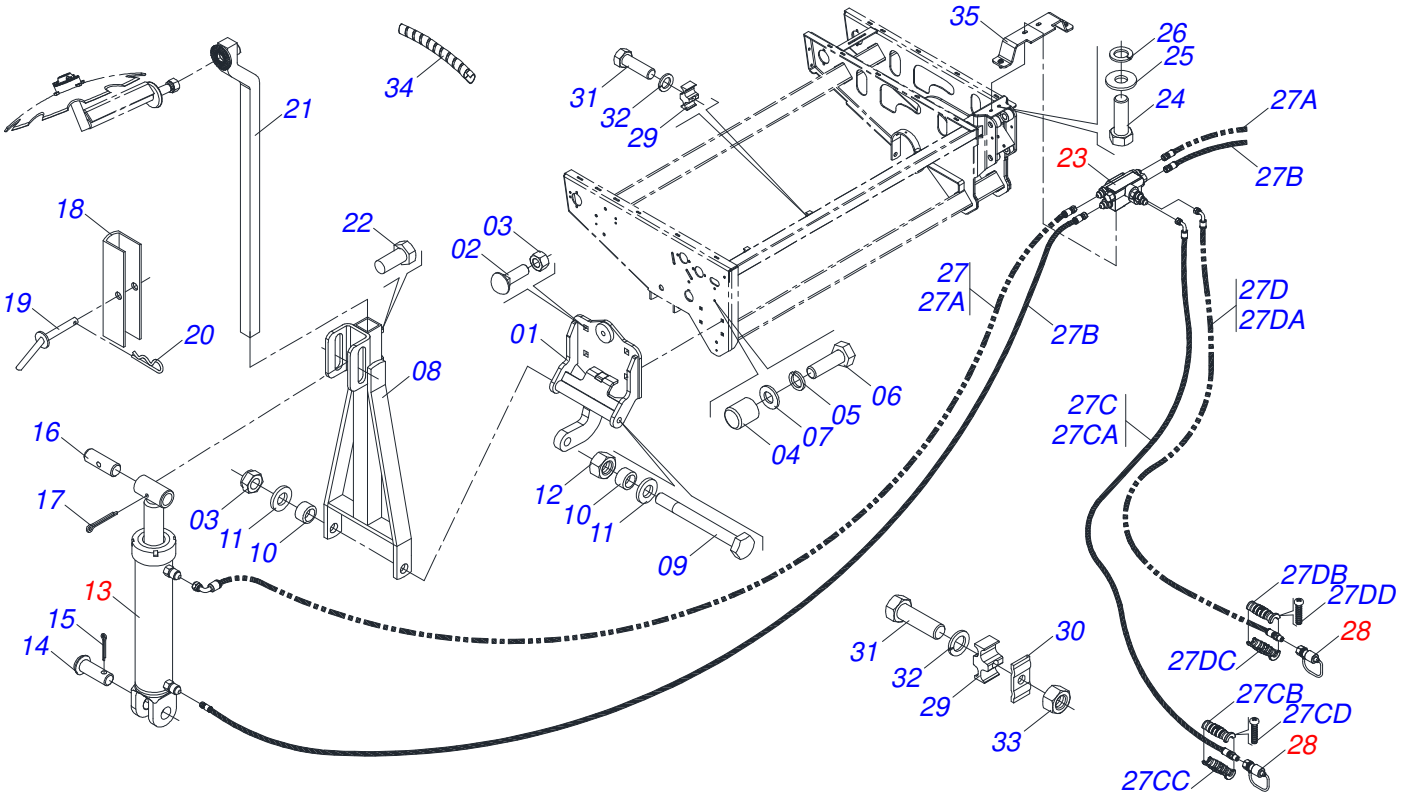

Item	Code	Description	See page	QT
01	0521066622	ROW MARKER ARM SUPPORT		02
02	0503012699	BOLT 5/8NC X 2 CAPQ G.5 ZN 1K20548		04
03	0503012412	5/8 UNC SELF LOCKING NUT		04
04	0503011070	BEATER		02
05	0503010019	1/2" SPRING WASHER		02
06	0503010740	BOLT 1/2 UNC X 2 CS G.5 ZN		02
07	0551019213	FLAT WASHER		02
08	0511061811	ROW MARKER ARM		02
09	0521061655	BOLT 5/8 UNC X 320 MM		02
10	0521010479	SLEEVE ARTICULATION		04
11	0501012140	FLAT WASHER		04
12	0503012412	5/8 UNC SELF LOCKING NUT		02
13	0511058449	HYDRAULIC CYLINDER	104	02
14	0521010575	C0.9" X 3.3" COUPLING SHAFT		02
15	0503010523	1/4" X 2" COTTERPIN		02
16	0511015779	1" X 4.2" AXLE		02
17	0503010523	1/4" X 2" COTTERPIN		02
18	0511017592	11.8" X 1.6" TRANSPORT LOCK		02
19	0501068994	8,30 X 78 LOCK PIN		02
20	0503030168	HITCH PIN CLIP		02
21	0501066949	1235 TURNBUCKLE		02
22	0503011854	5/8" X 1-1/4" BOLT		04
23	0501054649	HBM SEQUENTIAL VALVE	105	01
24	0503010751	C3/8" X 1.1/4" HEX BOLT G.5		02
25	0501010984	FLAT WASHER		02
26	0503010025	3/8" SPRING WASHER		02
27	0521050113	HYDRAULIC MARKER HAND SET		01
27A	0501082108	TR-TR HOSE		02
27B	0501080605	3/8" X 160" TR-TC HOSE ASSY		02
27C	0521052849	3/8 X 4200 TC-TM PURPLE/RED HOSE		01
27CA	0501080878	3/8 X 4200 TC-TM HOSE ASSY		01

Item	Code	Description	See page	QT
27CB	0503034491	HYDRAULIC HOSE GRIP (PURPLE)		01
27CC	0503034495	HYDRAULIC HOSE GRIP (RED)		01
27CD	0503018952	PLASTIC BOLT		06
27D	0521052850	3/8 X 4200 TC-TM PURPLE/BLUE HOSE		01
27DA	0501080878	3/8 X 4200 TC-TM HOSE ASSY		01
27DB	0503034491	HYDRAULIC HOSE GRIP (PURPLE)		01
27DC	0503034494	HYDRAULIC HOSE GRIP (BLUE)		01
27DD	0503018952	PLASTIC BOLT		06
28	0501053834	MALE QUICK COUPLER	107	02
29	0502012702	BODY SUPPORT CLAMP		06
30	0531011180	UPPER BODY CLIP		04
31	0503012555	SCREW 7/16 UNC X 2 CS RT G.7 ZN		06
32	0503010180	7/16" SPRING WASHER		06
33	0503010244	7/16" NUT		02
34	0571014419	PLASTIC PROTECTION SPRING HOSE 3/4 X 700MM		04
35	0581010011	VALVE FIXING SUPPORT		01

HYDRAULIC CYLINDER

0511058449

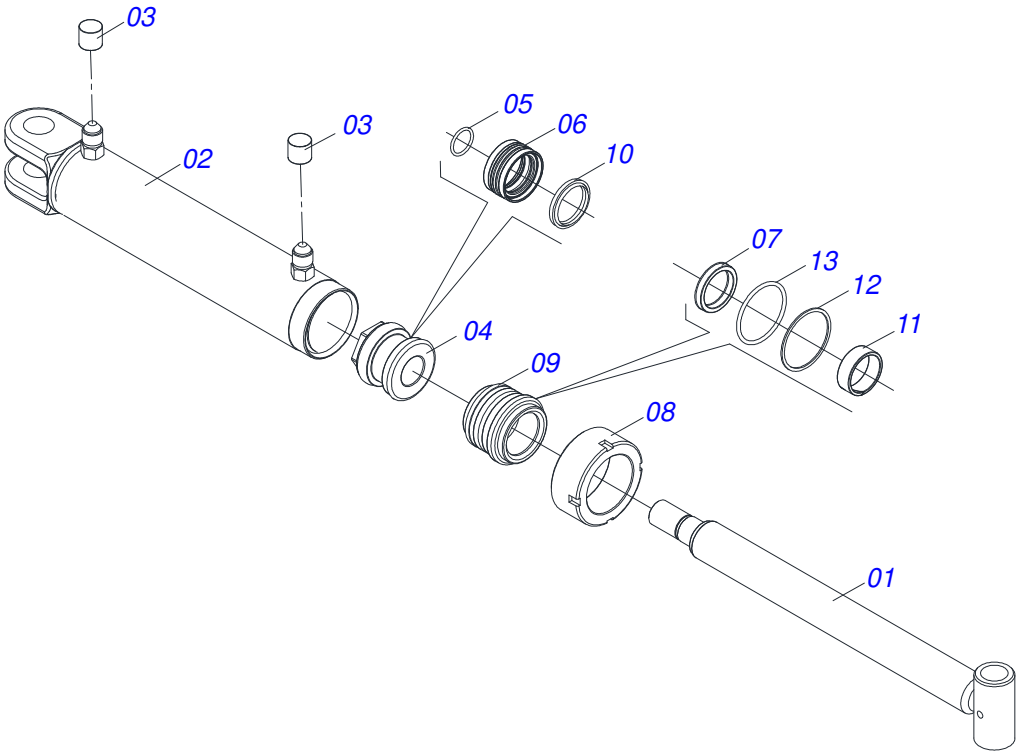

Item	Code	Description	See page	QT
01	0521066635	TURNBUCKLE		01
02	0511062810	2.5" X 15"CYLINDER CASE		01
03	0503030385	CYLINDER PLUG N-002		02
04	0502012837	PISTON		01
05	0503011109	2-119 N 3006-9B O'RING		01
06	0503018005	RING		01
07	0503018003	GASKET		01
08	0502010471	MOBILE COVER		01
09	0581010668	RING SUPPORT		01
10	0503010163	D-1500 SCRAPER RING		01
11	0503018004	RING		01
12	0503018163	BACK-UP RING		02
13	0503018162	O'RING		02
14	0511032280	ASSY REPAIR KIT 38,10 X 63,50 (0511058413)		01

HBM SEQUENTIAL VALVE

0501054649

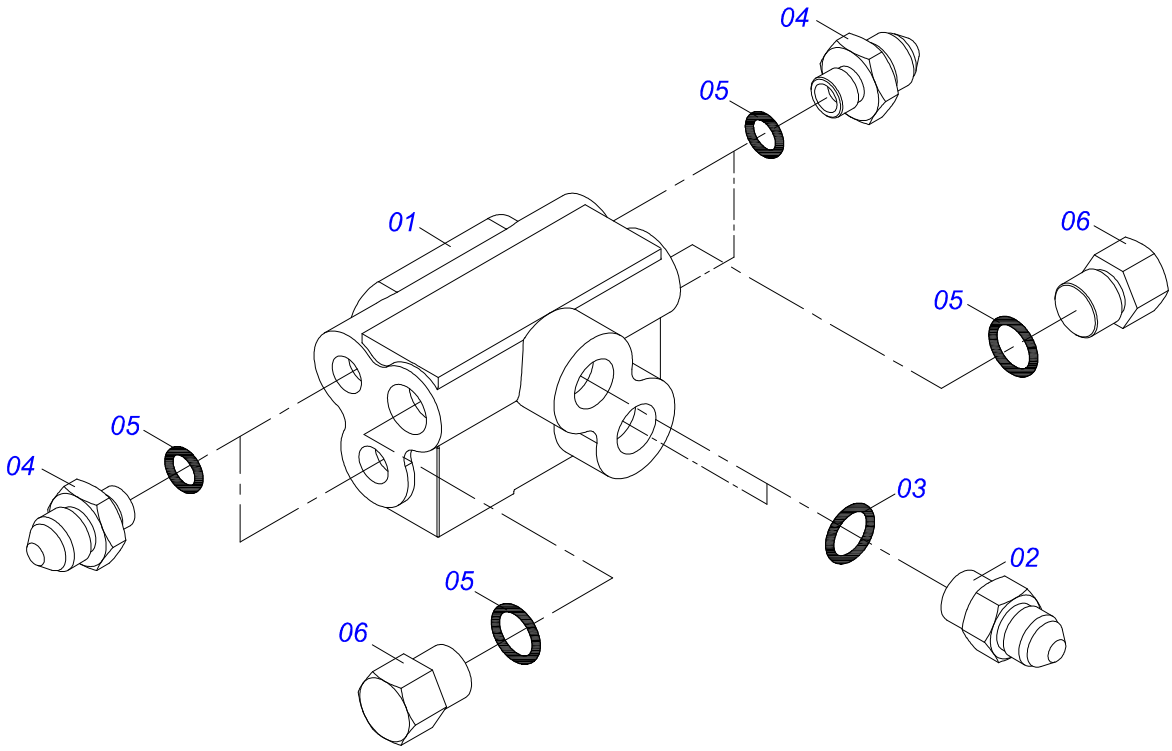

Item	Code	Description	See page	QT
01	0503060132	VDFS-002 T SEQUENCEL VALVE		01
02	0501010617	3/4" NIPPLE		02
03	0503010190	2-114 N 3006-9B O'RING		02
04	0501012109	3/4" X 9/16" NIPPLE FITTING		04
05	0503011036	2-111 N 3006-9B O'RING		06
06	0531019339	9/16" UNF X 12 PUMP		02

VALVE SUPPORT ASSEMBLY

0511058119

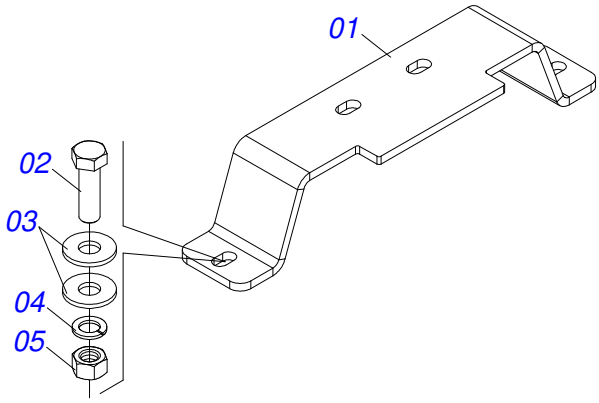

Item	Code	Description	See page	QT
01	0581010011	VALVE FIXING SUPPORT		01
02	0503010751	C3/8" X 1.1/4" HEX BOLT G.5		02
03	0501010984	FLAT WASHER		04
04	0503010025	3/8" SPRING WASHER		02
05	0503010026	3/8" NUT		02

MALE QUICK COUPLER

0501053834

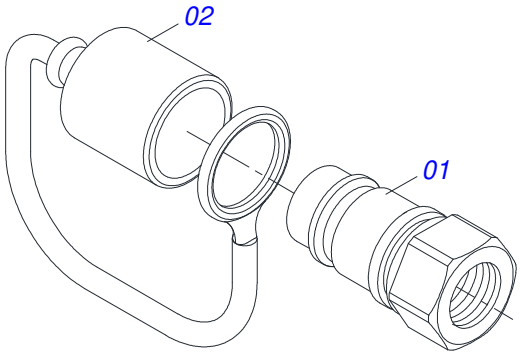

Item	Code	Description	See page	QT
01	0503011627	MALE QUICK COUPLER AGR 1/2 NPT		01
02	0503011882	MALE QUICK COUPLER CAP		01

ROW MARKER DISK ASSEMBLY

0501050633

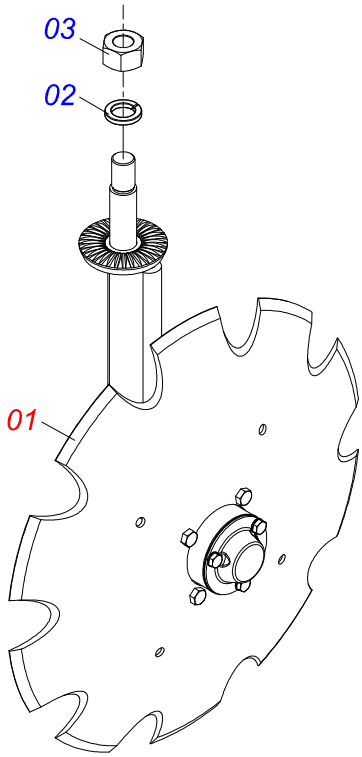

Item	Code	Description	See page	QT
01	0511053904	ROW MARKER DISC	109	01
02	0503010023	3/4" SPRING WASHER		01
03	0503010014	3/4" NUT		01

ROW MARKER DISC

0511053904

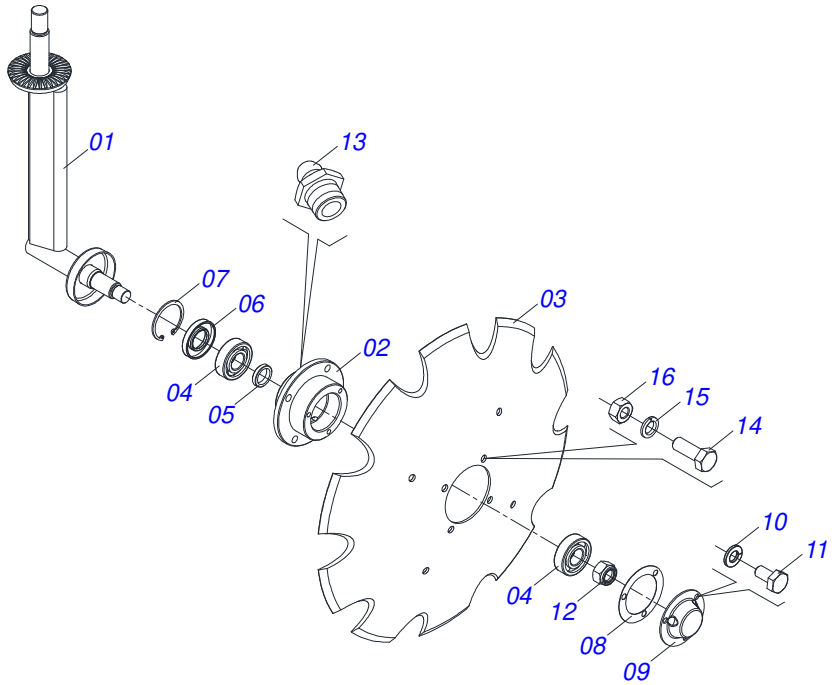

Item	Code	Description	See page	QT
01	0501066800	ROW MARKER DISC AXLE ASSY		01
02	0502011907	DEPTH CONTROL WHEEL HUB		01
03	0602023110	DR16X3 NOTCHED DISC BLADE		01
04	0503010269	6204 BALL BEARING		02
05	0501013636	SPACING SLEEVE		01
06	0503010689	SEAL 00763-BR		01
07	0503011105	SEAL RING		01
08	0503030757	2.9" X 2" X 0.02" JOINT		01
09	0521019178	COVER DEPTH		01
10	0503011441	SPRING WASHER		03
11	0503014729	1/4" UNF X 1/2" BOLT		03
12	0503010878	5/8" SELF ALIGNING NUT		01
13	0503010691	1/4" GREASE FITTING		01
14	0503010358	5/16" X 5/8" BOLT		04
15	0503011444	SPRING WASHER		04
16	0503010337	5/16" NUT		04

PLATFORM TRANSPORT SUPPORT

0511059323

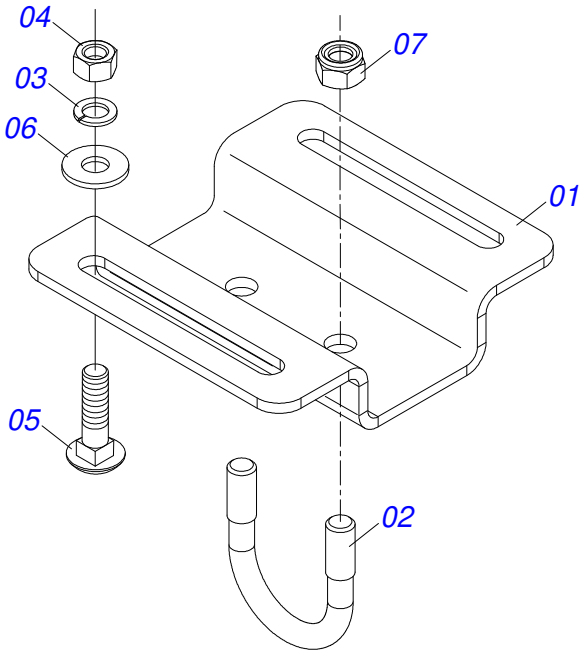

Item	Code	Description	See page	QT
01	0581011989	SIDE BODY FIXER PLATFORM		01
02	0551019884	45 X 50 X 3/8 FASTENER		01
03	0503010025	3/8" SPRING WASHER		02
04	0503010026	3/8" NUT		02
05	0501011643	3/8 X 1"BOLT		02
06	0501010984	FLAT WASHER		02
07	0503013357	3/8" SELF-ADJUSTING NUT		02

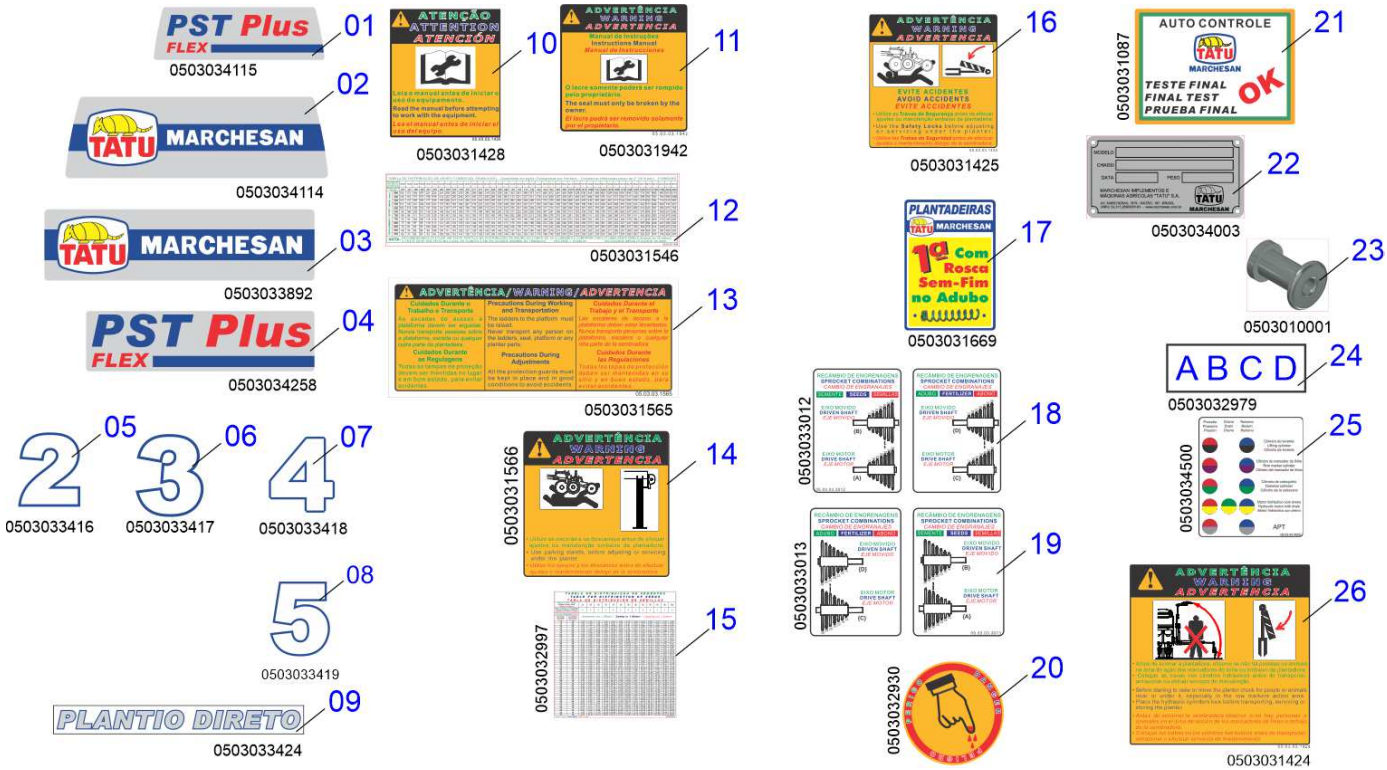

Item	Code	Description	See page	QT
01	0503034115	ADHESIVE LABEL		01
02	0503034114	ADHESIVE LABEL LOGO TATU BOX 190 X 530		01
03	0503033892	ADHESIVE LABEL LOGO TATU BOX 190 X 720		01
04	0503034258	ADHESIVE LABEL		01
05	0503033416	ADHESIVE LABEL		02
06	0503033417	ADHESIVE LABEL		02
07	0503033418	ADHESIVE LABEL 4 NUMBER FOR PLANTER		02
08	0503033419	ADHESIVE LABEL 5 NUMBER FOR PLANTING		02
09	0503033424	DIRECT PLANTIO ADHESIVE LABEL		02
10	0503031428	READ MANUAL DECAL		01
11	0503031942	ADHESIVE LABEL		01
12	0503031546	ADHESIVE LABEL TABLE FERTILIZER P2		02
13	0503031565	ADHESIVE LABEL CARE		02
14	0503031566	ADHESIVE LABEL		02
15	0503032997	ADHESIVE LABEL SEED DISTRIBUTOR TABLE		02
16	0503031425	ADHESIVE LABEL ATTENTION		02
17	0503031669	ADHESIVE LABEL		01
18	0503033012	ADHESIVE LABEL RECAMBIO GEAR SEED / FERTILIZER LEFT		01
19	0503033013	ADHESIVE LABEL RECAMBIO GEAR SEED / FERTILIZER LEFT		01
20	0503032930	ADHESIVE LABEL DANGER		04
21	0503031087	ADHESIVE LABEL		01
22	0503034003	SERIAL NUMBER TAG 61 X 118		01
23	0503010001	3.2 X 5.5 RIVET		04
24	0503032979	ADHESIVE LABEL LETTERS A B C D		02
25	0503034500	ADHESIVE LABEL		01
26	0503031424	ADHESIVE LABEL ATTENTION MARCADOR LÍNEA HIDRAULICO		02

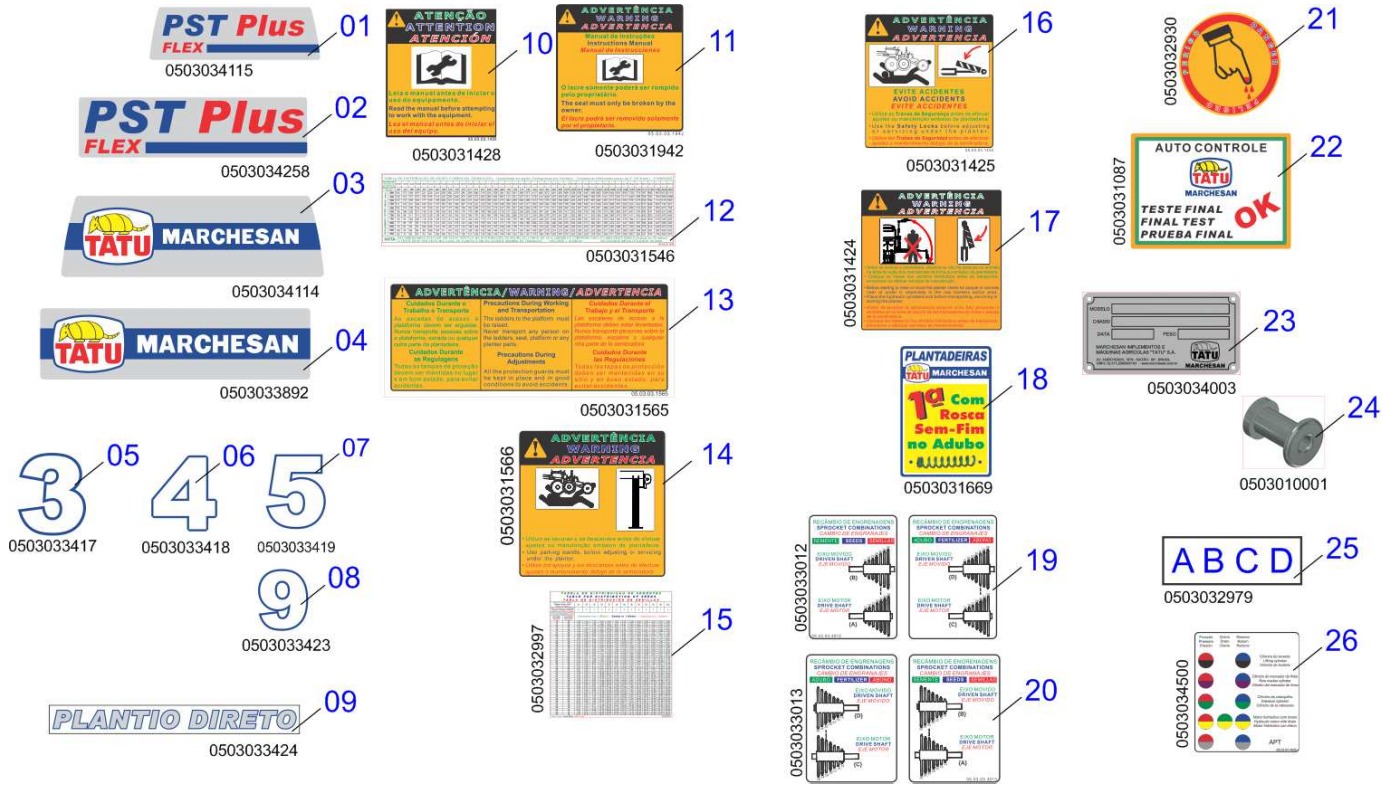

Item	Code	Description	See page	QT
01	0503034115	ADHESIVE LABEL		01
02	0503034258	ADHESIVE LABEL		01
03	0503034114	ADHESIVE LABEL LOGO TATU BOX 190 X 530		01
04	0503033892	ADHESIVE LABEL LOGO TATU BOX 190 X 720		01
05	0503033417	ADHESIVE LABEL		02
06	0503033418	ADHESIVE LABEL 4 NUMBER FOR PLANTER		02
07	0503033419	ADHESIVE LABEL 5 NUMBER FOR PLANTING		02
08	0503033423	LABEL ADHESIVE NUMBER 9		02
09	0503033424	DIRECT PLANTIO ADHESIVE LABEL		02
10	0503031428	READ MANUAL DECAL		01
11	0503031942	ADHESIVE LABEL		01
12	0503031546	ADHESIVE LABEL TABLE FERTILIZER P2		02
13	0503031565	ADHESIVE LABEL CARE		02
14	0503031566	ADHESIVE LABEL		02
15	0503032997	ADHESIVE LABEL SEED DISTRIBUTOR TABLE		02
16	0503031425	ADHESIVE LABEL ATTENTION		02
17	0503031424	ADHESIVE LABEL ATTENTION MARCADOR LÍNEA HIDRAULICO		02
18	0503031669	ADHESIVE LABEL		01
19	0503033012	ADHESIVE LABEL RECAMBIO GEAR SEED / FERTILIZER LEFT		01
20	0503033013	ADHESIVE LABEL RECAMBIO GEAR SEED / FERTILIZER LEFT		01
21	0503032930	ADHESIVE LABEL DANGER		04
22	0503031087	ADHESIVE LABEL		01
23	0503034003	SERIAL NUMBER TAG 61 X 118		01
24	0503010001	3.2 X 5.5 RIVET		04
25	0503032979	ADHESIVE LABEL LETTERS A B C D		02
26	0503034500	ADHESIVE LABEL		01

Item	Code	Description	See page	QT
01	0503034228	ADHESIVE LABEL PST FLEX PLUS LOWER (05 NOZZLES)		02
02	0503034229	ADHESIVE LABEL LOGO TATU LOWER (05 NOZZLES)		02
03	0503033892	ADHESIVE LABEL LOGO TATU BOX 190 X 720		01
04	0503034258	ADHESIVE LABEL		01
05	0503033414	ADHESIVE LABEL 0 NUMBER FOR PLANTING		02
06	0503033418	ADHESIVE LABEL 4 NUMBER FOR PLANTER		04
07	0503033419	ADHESIVE LABEL 5 NUMBER FOR PLANTING		02
08	0503033424	DIRECT PLANTIO ADHESIVE LABEL		02
09	0503031428	READ MANUAL DECAL		01
10	0503031942	ADHESIVE LABEL		01
11	0503031546	ADHESIVE LABEL TABLE FERTILIZER P2		02
12	0503031565	ADHESIVE LABEL CARE		02
13	0503031566	ADHESIVE LABEL		02
14	0503032997	ADHESIVE LABEL SEED DISTRIBUTOR TABLE		02
15	0503031425	ADHESIVE LABEL ATTENTION		02
16	0503031424	ADHESIVE LABEL ATTENTION MARCADOR LÍNEA HIDRAULICO		02
17	0503031669	ADHESIVE LABEL		01
18	0503033012	ADHESIVE LABEL RECAMBIO GEAR SEED / FERTILIZER LEFT		01
19	0503033013	ADHESIVE LABEL RECAMBIO GEAR SEED / FERTILIZER LEFT		01
20	0503032930	ADHESIVE LABEL DANGER		05
21	0503031087	ADHESIVE LABEL		01
22	0503034003	SERIAL NUMBER TAG 61 X 118		01
23	0503010001	3.2 X 5.5 RIVET		04
24	0503032979	ADHESIVE LABEL LETTERS A B C D		02
25	0503034500	ADHESIVE LABEL		01

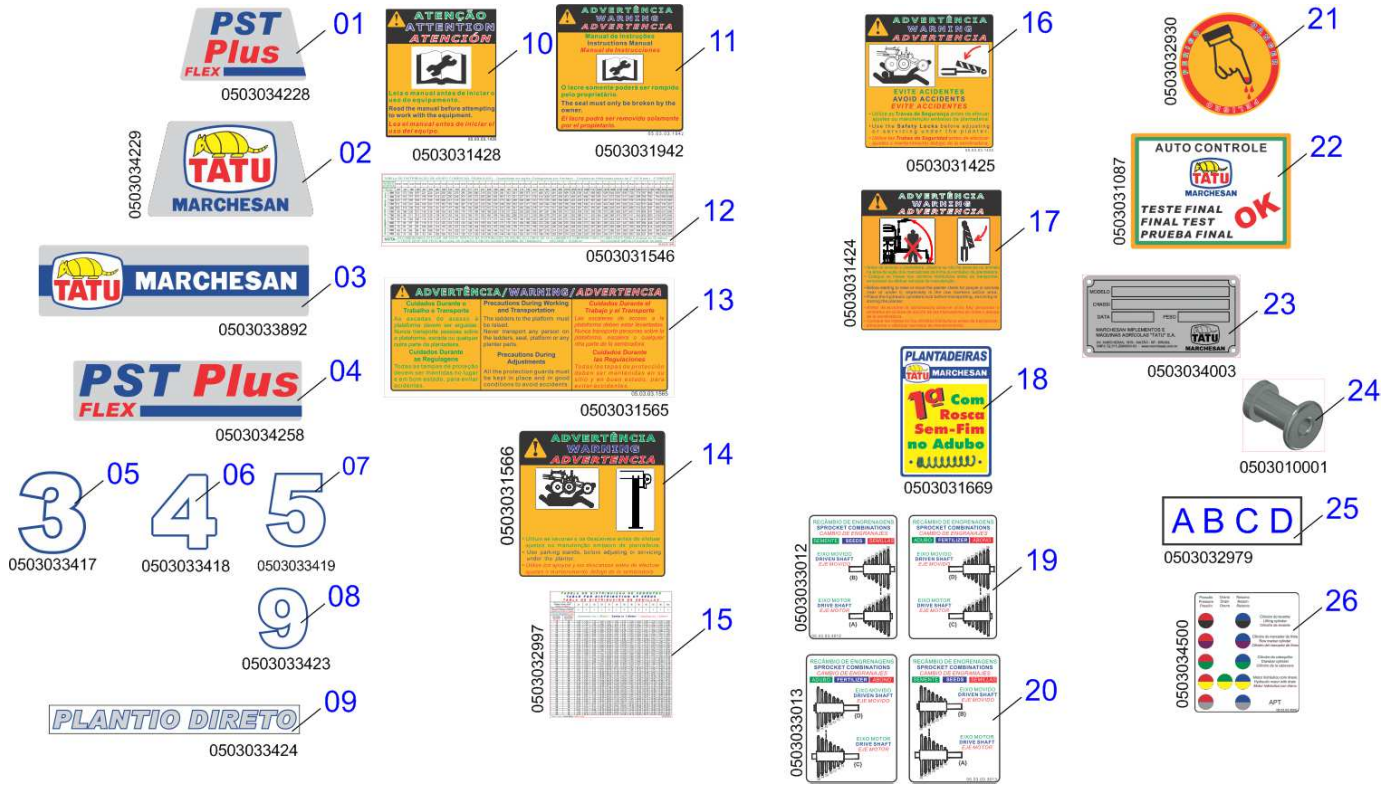

Item	Code	Description	See page	QT
01	0503034228	ADHESIVE LABEL PST FLEX PLUS LOWER (05 NOZZLES)		01
02	0503034229	ADHESIVE LABEL LOGO TATU LOWER (05 NOZZLES)		01
03	0503033892	ADHESIVE LABEL LOGO TATU BOX 190 X 720		01
04	0503034258	ADHESIVE LABEL		01
05	0503033417	ADHESIVE LABEL		02
06	0503033418	ADHESIVE LABEL 4 NUMBER FOR PLANTER		02
07	0503033419	ADHESIVE LABEL 5 NUMBER FOR PLANTING		02
08	0503033423	LABEL ADHESIVE NUMBER 9		02
09	0503033424	DIRECT PLANTIO ADHESIVE LABEL		02
10	0503031428	READ MANUAL DECAL		01
11	0503031942	ADHESIVE LABEL		01
12	0503031546	ADHESIVE LABEL TABLE FERTILIZER P2		02
13	0503031565	ADHESIVE LABEL CARE		02
14	0503031566	ADHESIVE LABEL		02
15	0503032997	ADHESIVE LABEL SEED DISTRIBUTOR TABLE		02
16	0503031425	ADHESIVE LABEL ATTENTION		02
17	0503031424	ADHESIVE LABEL ATTENTION MARCADOR LÍNEA HIDRAULICO		02
18	0503031669	ADHESIVE LABEL		01
19	0503033012	ADHESIVE LABEL RECAMBIO GEAR SEED / FERTILIZER LEFT		01
20	0503033013	ADHESIVE LABEL RECAMBIO GEAR SEED / FERTILIZER LEFT		01
21	0503032930	ADHESIVE LABEL DANGER		05
22	0503031087	ADHESIVE LABEL		01
23	0503034003	SERIAL NUMBER TAG 61 X 118		01
24	0503010001	3.2 X 5.5 RIVET		04
25	0503032979	ADHESIVE LABEL LETTERS A B C D		02
26	0503034500	ADHESIVE LABEL		01

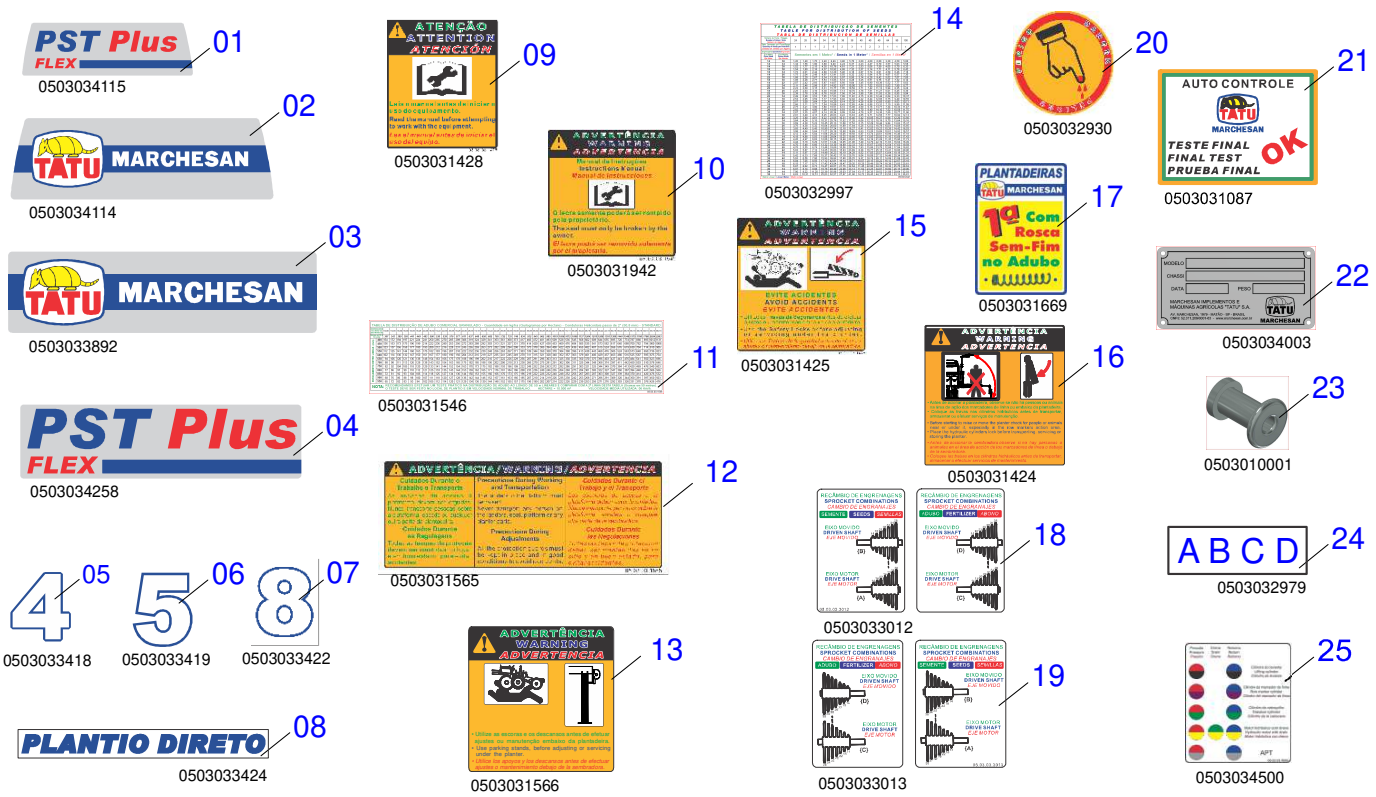

Item	Code	Description	See page	QT
001	0503034115	ADHESIVE LABEL		01
002	0503034114	ADHESIVE LABEL LOGO TATU BOX 190 X 530		02
003	0503033892	ADHESIVE LABEL LOGO TATU BOX 190 X 720		01
004	0503034258	ADHESIVE LABEL		01
005	0503033418	ADHESIVE LABEL 4 NUMBER FOR PLANTER		04
006	0503033419	ADHESIVE LABEL 5 NUMBER FOR PLANTING		02
007	0503033422	ADHESIVE LABEL		02
008	0503033424	DIRECT PLANTIO ADHESIVE LABEL		02
009	0503031428	READ MANUAL DECAL		01
010	0503031942	ADHESIVE LABEL		01
011	0503031546	ADHESIVE LABEL TABLE FERTILIZER P2		02
012	0503031565	ADHESIVE LABEL CARE		02
013	0503031566	ADHESIVE LABEL		02
014	0503032997	ADHESIVE LABEL SEED DISTRIBUTOR TABLE		02
015	0503031425	ADHESIVE LABEL ATTENTION		02
016	0503031424	ADHESIVE LABEL ATTENTION MARCADOR LÍNEA HIDRAULICO		02
017	0503031669	ADHESIVE LABEL		01
018	0503033012	ADHESIVE LABEL RECAMBIO GEAR SEED / FERTILIZER LEFT		01
019	0503033013	ADHESIVE LABEL RECAMBIO GEAR SEED / FERTILIZER LEFT		01
020	0503032930	ADHESIVE LABEL DANGER		06
021	0503031087	ADHESIVE LABEL		01
022	0503034003	SERIAL NUMBER TAG 61 X 118		01
023	0503010001	3.2 X 5.5 RIVET		04
024	0503032979	ADHESIVE LABEL LETTERS A B C D		02
025	0503034500	ADHESIVE LABEL		01

Item	Code	Description	See page	QT
01	0503034115	ADHESIVE LABEL		01
02	0503034114	ADHESIVE LABEL LOGO TATU BOX 190 X 530		02
03	0503033892	ADHESIVE LABEL LOGO TATU BOX 190 X 720		01
04	0503034258	ADHESIVE LABEL		01
05	0503033417	ADHESIVE LABEL		02
06	0503033418	ADHESIVE LABEL 4 NUMBER FOR PLANTER		02
07	0503033419	ADHESIVE LABEL 5 NUMBER FOR PLANTING		04
08	0503033424	DIRECT PLANTIO ADHESIVE LABEL		02
09	0503031428	READ MANUAL DECAL		01
10	0503031942	ADHESIVE LABEL		01
11	0503031546	ADHESIVE LABEL TABLE FERTILIZER P2		02
12	0503031565	ADHESIVE LABEL CARE		02
13	0503031566	ADHESIVE LABEL		02
14	0503032997	ADHESIVE LABEL SEED DISTRIBUTOR TABLE		02
15	0503031425	ADHESIVE LABEL ATTENTION		02
16	0503031424	ADHESIVE LABEL ATTENTION MARCADOR LÍNEA HIDRAULICO		02
17	0503031669	ADHESIVE LABEL		01
18	0503033012	ADHESIVE LABEL RECAMBIO GEAR SEED / FERTILIZER LEFT		01
19	0503033013	ADHESIVE LABEL RECAMBIO GEAR SEED / FERTILIZER LEFT		01
20	0503032930	ADHESIVE LABEL DANGER		06
21	0503031087	ADHESIVE LABEL		01
22	0503034003	SERIAL NUMBER TAG 61 X 118		01
23	0503010001	3.2 X 5.5 RIVET		04
24	0503032979	ADHESIVE LABEL LETTERS A B C D		02
25	0503034500	ADHESIVE LABEL		01

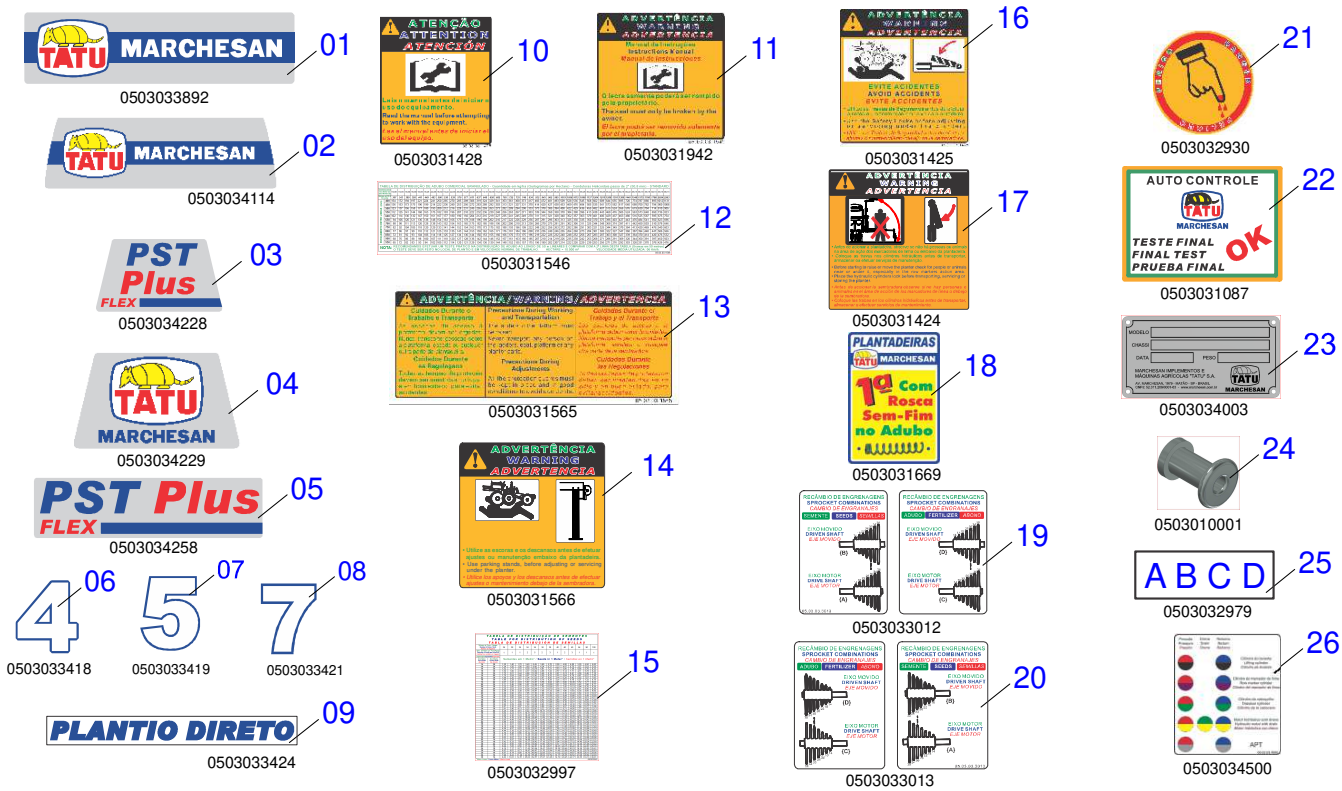

Item	Code	Description	See page	QT
01	0503033892	ADHESIVE LABEL LOGO TATU BOX 190 X 720		01
02	0503034114	ADHESIVE LABEL LOGO TATU BOX 190 X 530		01
03	0503034228	ADHESIVE LABEL PST FLEX PLUS LOWER (05 NOZZLES)		02
04	0503034229	ADHESIVE LABEL LOGO TATU LOWER (05 NOZZLES)		02
05	0503034258	ADHESIVE LABEL		01
06	0503033418	ADHESIVE LABEL 4 NUMBER FOR PLANTER		02
07	0503033419	ADHESIVE LABEL 5 NUMBER FOR PLANTING		04
08	0503033421	ADHESIVE LABEL 7 NUMBER FOR PLANTING		02
09	0503033424	DIRECT PLANTIO ADHESIVE LABEL		02
10	0503031428	READ MANUAL DECAL		01
11	0503031942	ADHESIVE LABEL		01
12	0503031546	ADHESIVE LABEL TABLE FERTILIZER P2		02
13	0503031565	ADHESIVE LABEL CARE		02
14	0503031566	ADHESIVE LABEL		02
15	0503032997	ADHESIVE LABEL SEED DISTRIBUTOR TABLE		02
16	0503031425	ADHESIVE LABEL ATTENTION		02
17	0503031424	ADHESIVE LABEL ATTENTION MARCADOR LÍNEA HIDRAULICO		02
18	0503031669	ADHESIVE LABEL		01
19	0503033012	ADHESIVE LABEL RECAMBIO GEAR SEED / FERTILIZER LEFT		01
20	0503033013	ADHESIVE LABEL RECAMBIO GEAR SEED / FERTILIZER LEFT		01
21	0503032930	ADHESIVE LABEL DANGER		07
22	0503031087	ADHESIVE LABEL		01
23	0503034003	SERIAL NUMBER TAG 61 X 118		01
24	0503010001	3.2 X 5.5 RIVET		04
25	0503032979	ADHESIVE LABEL LETTERS A B C D		02
26	0503034500	ADHESIVE LABEL		01

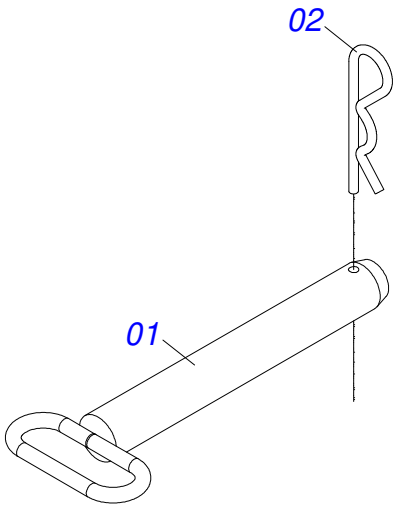

Item	Code	Description	See page	QT
01	0521064036	TRACTOR HITCH AXLE		01
02	0503030012	HITCH PIN CLIP		01

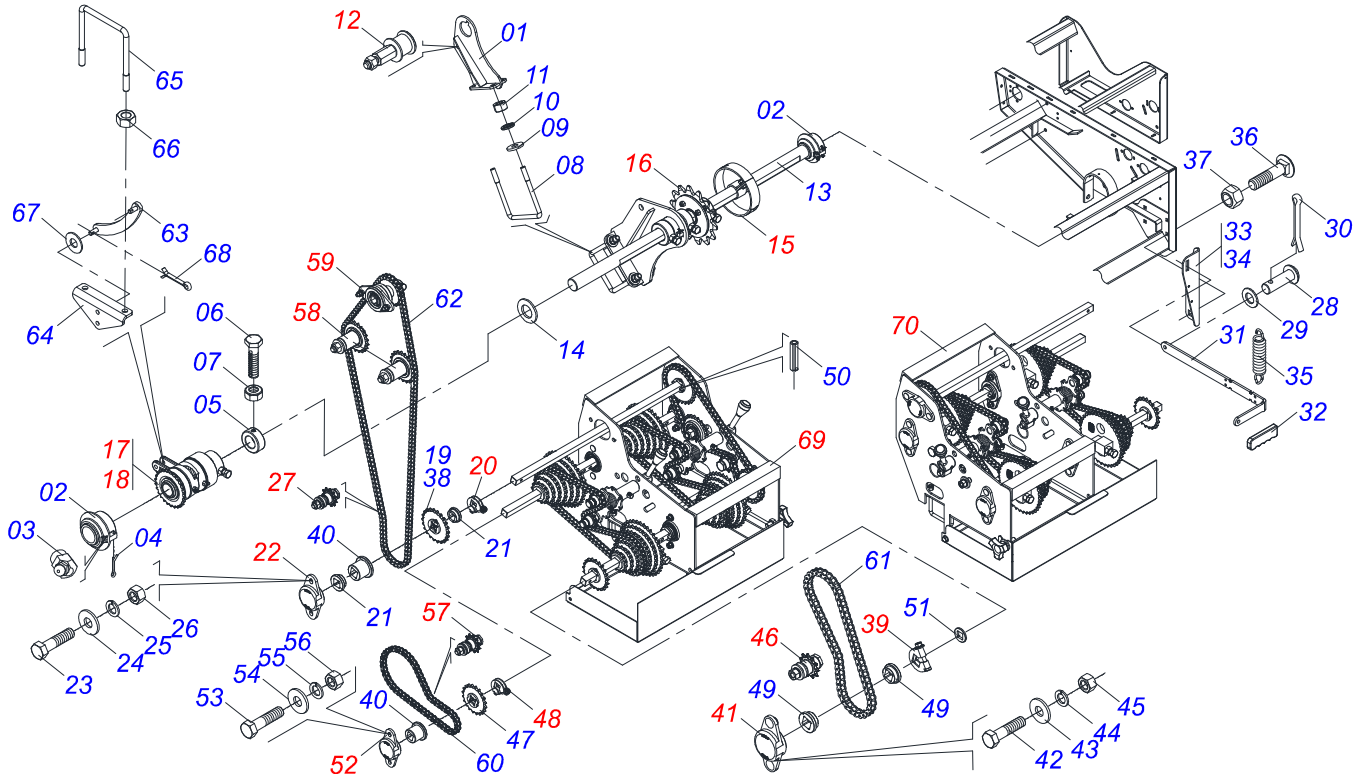

Item	Code	Description	See page	QT
01	0521065954	SUPPORT BEARING AXLE MOTOR		02
02	0501110639	BEARING		06
03	0503011099	GREASE FITTING		06
04	0503010300	5/32" X 1" COTTERPIN		06
05	0511015961	LOCK BUSHING		04
06	0503030679	BOLT 1/2 UNC X 1.1/4 CSPC G.5 ZN		04
07	0503010060	1/2" NUT		04
08	0521014021	1/2" X 4.5" X 5.4" FASTENER		04
09	0511017302	FLAT WASHER		08
10	0503010019	1/2" SPRING WASHER		08
11	0503010060	1/2" NUT		08
12	0501058241	WHEEL SUPPORT CHAIN TENSIONER	42	02
13	0571018904	AXLE MOTOR 1550		02
14	0501018466	FLAT WASHER		02
15	0501052560	MOTOR AXLE SIGNAL	127	02
16	0511051434	TRANSMISSION ACTUATOR	128	02
17	0511047069	RIGHT SIDE TRANSMISSION ACTUATOR	129	01
18	0511047070	LEFT SIDE TRANSMISSION ACTUATOR	130	01
19	0511061759	22Z P12,70 FQ 3/4" GEAR		02
20	0501053788	3/4 SQUARE AXLE FASTENER	70	02
21	0503030303	SUPPORT WASHER		04
22	0501056271	GEARBOX CLOSED BEARING	71	02
23	0503010751	C3/8" X 1.1/4" HEX BOLT G.5		04
24	0501010984	FLAT WASHER		08
25	0503010025	3/8" SPRING WASHER		04
26	0503010026	3/8" NUT		04
27	0511057265	TRANSMISSION CHAIN TENSIONER	131	02
28	0521010773	0.37" X 1.18" COUPLING SHAFT		02
29	0501010984	FLAT WASHER		06
30	0503010140	1/8" X 3/4" COTTERPIN		02
31	0571018846	DISASSEMBLE LEVER		02

Item	Code	Description	See page	QT
32	0503033942	COVER REGULATORY WHEEL		02
33	0571018844	SUPPORT RIGHT DISASSEMBLE LEVER		01
34	0571018845	SUPPORT LEFT DISASSEMBLE LEVER		01
35	0503030093	TRACTION SPRING		02
36	0503012699	BOLT 5/8NC X 2 CAPQ G.5 ZN 1K20548		04
37	0503012412	5/8 UNC SELF LOCKING NUT		04
38	0511061759	22Z P12,70 FQ 3/4" GEAR		02
39	0501053788	3/4 SQUARE AXLE FASTENER	70	02
40	0503030275	AGRICULTURAL BEARING		02
41	0501056271	GEARBOX CLOSED BEARING	71	02
42	0503010751	C3/8" X 1.1/4" HEX BOLT G.5		04
43	0501010984	FLAT WASHER		08
44	0503010025	3/8" SPRING WASHER		04
45	0503010026	3/8" NUT		04
46	0511057265	TRANSMISSION CHAIN TENSIONER	131	02
47	0511065209	20Z GEAR		02
48	0501053788	3/4 SQUARE AXLE FASTENER	70	02
49	0503030303	SUPPORT WASHER		02
50	0503010292	0.2" X 1.6" SPRING PIN		02
51	0521018630	1.4" X SQUARE 0.8" WASHER		02
52	0501056271	GEARBOX CLOSED BEARING	71	02
53	0503010751	C3/8" X 1.1/4" HEX BOLT G.5		04
54	0501010984	FLAT WASHER		08
55	0503010025	3/8" SPRING WASHER		04
56	0503010026	3/8" NUT		04
57	0501052810	TRANSMISSION CHAIN TENSIONER ASSEMBLY	132	02
58	0511050652	CHAIN TENSIONER	133	04
59	0501053653	BEARING WITH GEAR 20Z 3/4 HEX SHAFT	134	02
60	0503015637	40-1 X 56 CHAIN LINK + REDUCTION		02
61	0503014870	40-1 X 59 CHAIN LINK + MENDING		02
62	0503015001	40-1 X 153 CHAIN LINK + MENDING		02
63	0511069678	LH LOWER LEVER		02
64	0551019159	LEVER FIXER BODY		02
65	0561016468	FASTENER		02
66	0503011336	1/2" HEX SELF ADJUSTING NUT		04
67	0501010984	FLAT WASHER		04
68	0503010140	1/8" X 3/4" COTTERPIN		04
69	0521055335	RIGHT GEAR HOUSING SET	136	01
70	0521055337	LEFT GEAR HOUSING SET	138	01

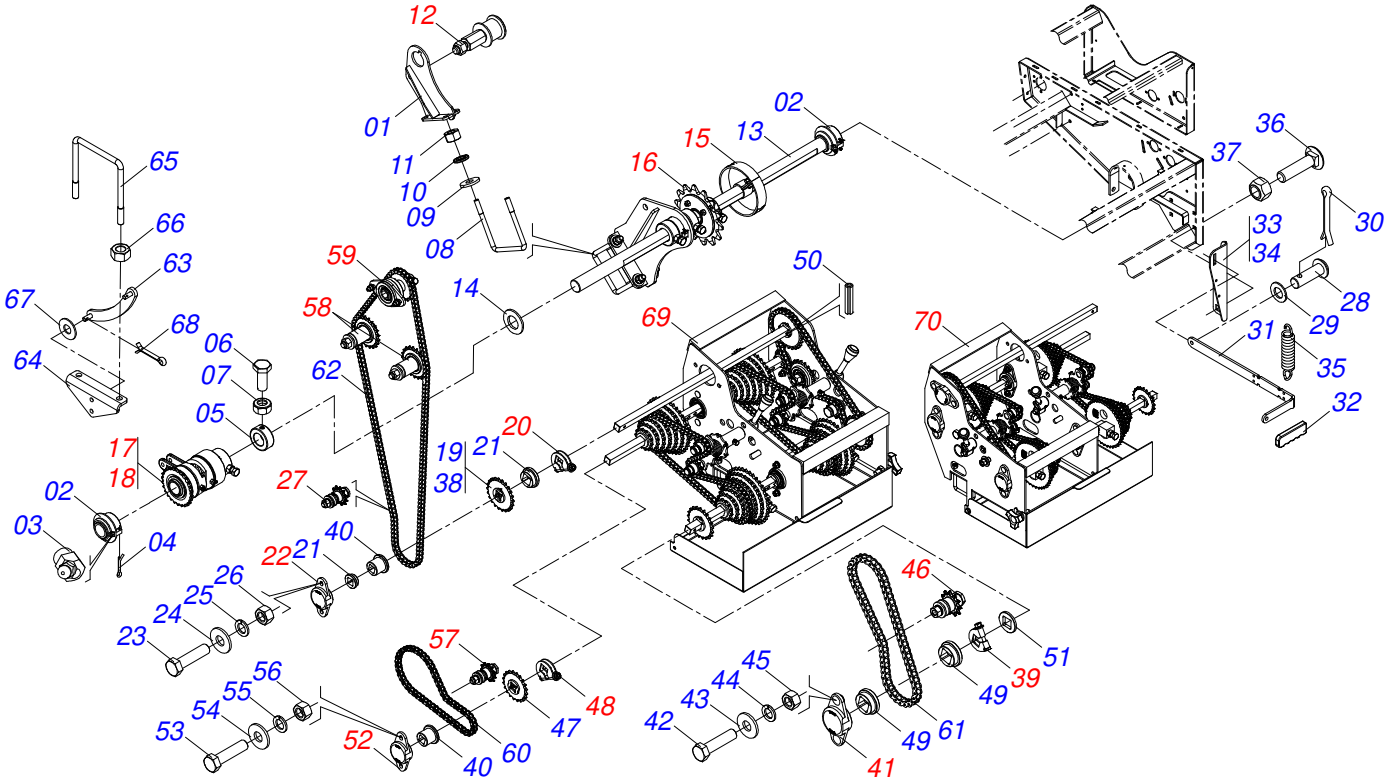

Item	Code	Description	See page	QT
01	0521065954	SUPPORT BEARING AXLE MOTOR		04
02	0501110639	BEARING		08
03	0503011099	GREASE FITTING		08
04	0503010300	5/32" X 1" COTTERPIN		08
05	0511015961	LOCK BUSHING		04
06	0503030679	BOLT 1/2 UNC X 1.1/4 CSPC G.5 ZN		04
07	0503010060	1/2" NUT		04
08	0521014021	1/2" X 4.5" X 5.4" FASTENER		08
09	0511017302	FLAT WASHER		16
10	0503010019	1/2" SPRING WASHER		16
11	0503010060	1/2" NUT		16
12	0501058241	WHEEL SUPPORT CHAIN TENSIONER	42	04
13	0571018905	AXLE MOTOR 1675		02
14	0501018466	FLAT WASHER		02
15	0501052560	MOTOR AXLE SIGNAL	127	02
16	0511051434	TRANSMISSION ACTUATOR	128	04
17	0511047069	RIGHT SIDE TRANSMISSION ACTUATOR	129	01
18	0511047070	LEFT SIDE TRANSMISSION ACTUATOR	130	01
19	0511061759	22Z P12,70 FQ 3/4" GEAR		02
20	0501053788	3/4 SQUARE AXLE FASTENER	70	02
21	0503030303	SUPPORT WASHER		04
22	0501056271	GEARBOX CLOSED BEARING	71	02
23	0503010751	C3/8" X 1.1/4" HEX BOLT G.5		04
24	0501010984	FLAT WASHER		08
25	0503010025	3/8" SPRING WASHER		04
26	0503010026	3/8" NUT		04
27	0511057265	TRANSMISSION CHAIN TENSIONER	131	02
28	0521010773	0.37" X 1.18" COUPLING SHAFT		02
29	0501010984	FLAT WASHER		06
30	0503010140	1/8" X 3/4" COTTERPIN		02
31	0571018846	DISASSEMBLE LEVER		02

Item	Code	Description	See page	QT
32	0503033942	COVER REGULATORY WHEEL		02
33	0571018844	SUPPORT RIGHT DISASSEMBLE LEVER		01
34	0571018845	SUPPORT LEFT DISASSEMBLE LEVER		01
35	0503030093	TRACTION SPRING		02
36	0503012699	BOLT 5/8NC X 2 CAPQ G.5 ZN 1K20548		04
37	0503012412	5/8 UNC SELF LOCKING NUT		04
38	0511061759	22Z P12,70 FQ 3/4" GEAR		02
39	0501053788	3/4 SQUARE AXLE FASTENER	70	02
40	0503030275	AGRICULTURAL BEARING		02
41	0501056271	GEARBOX CLOSED BEARING	71	02
42	0503010751	C3/8" X 1.1/4" HEX BOLT G.5		04
43	0501010984	FLAT WASHER		08
44	0503010025	3/8" SPRING WASHER		04
45	0503010026	3/8" NUT		04
46	0511057265	TRANSMISSION CHAIN TENSIONER	131	02
47	0511065209	20Z GEAR		02
48	0501053788	3/4 SQUARE AXLE FASTENER	70	02
49	0503030303	SUPPORT WASHER		02
50	0503010292	0.2" X 1.6" SPRING PIN		02
51	0521018630	1.4" X SQUARE 0.8" WASHER		02
52	0501056271	GEARBOX CLOSED BEARING	71	02
53	0503010751	C3/8" X 1.1/4" HEX BOLT G.5		04
54	0501010984	FLAT WASHER		08
55	0503010025	3/8" SPRING WASHER		04
56	0503010026	3/8" NUT		04
57	0501052810	TRANSMISSION CHAIN TENSIONER ASSEMBLY	132	02
58	0511050652	CHAIN TENSIONER	133	04
59	0501053653	BEARING WITH GEAR 20Z 3/4 HEX SHAFT	134	02
60	0503015637	40-1 X 56 CHAIN LINK + REDUCTION		02
61	0503014870	40-1 X 59 CHAIN LINK + MENDING		02
62	0503015001	40-1 X 153 CHAIN LINK + MENDING		02
63	0511069678	LH LOWER LEVER		02
64	0551019159	LEVER FIXER BODY		02
65	0561016468	FASTENER		02
66	0503011336	1/2" HEX SELF ADJUSTING NUT		04
67	0501010984	FLAT WASHER		04
68	0503010140	1/8" X 3/4" COTTERPIN		04
69	0521055335	RIGHT GEAR HOUSING SET	136	01
70	0521055337	LEFT GEAR HOUSING SET	138	01

TRANSMISSION ASSEMBLY - 4045

0511058658

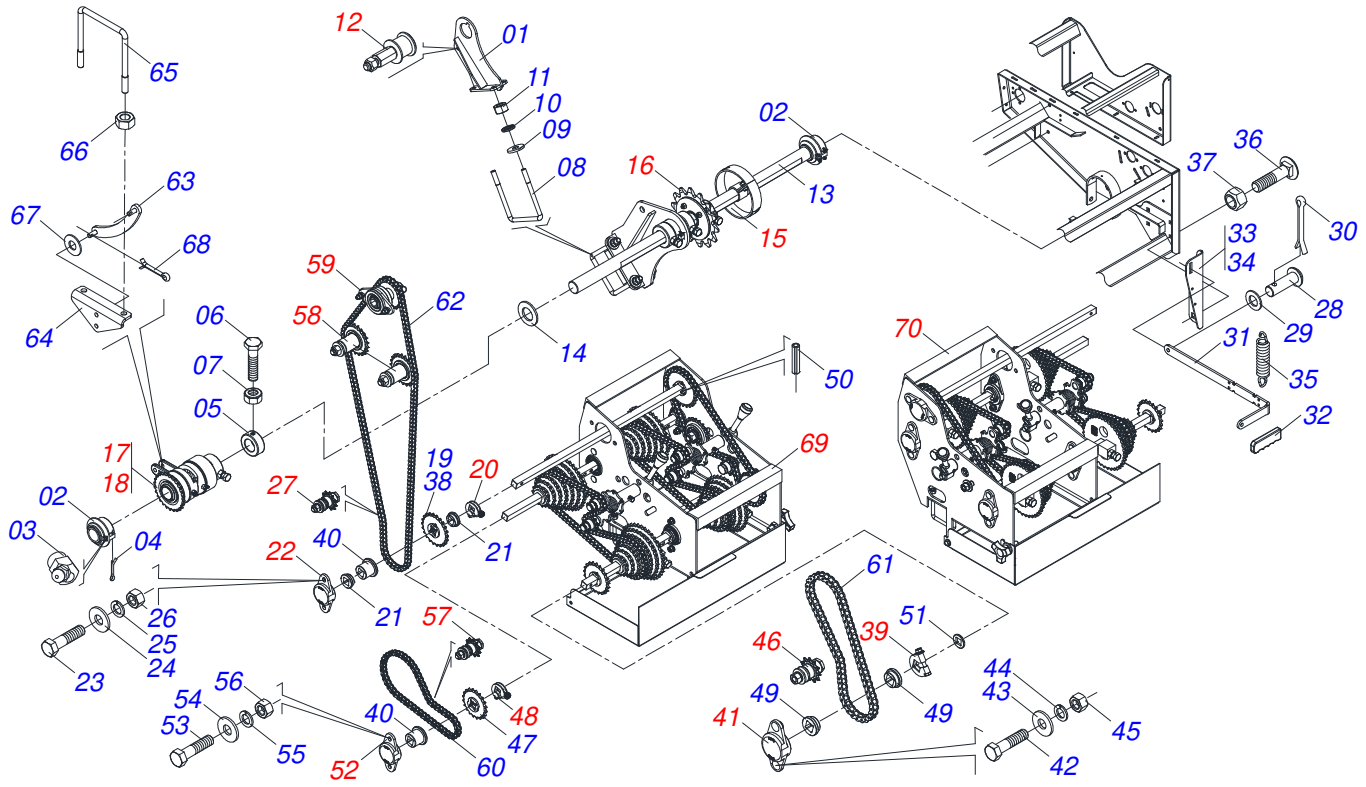

Item	Code	Description	See page	QT
01	0521065954	SUPPORT BEARING AXLE MOTOR		04
02	0501110639	BEARING		08
03	0503011099	GREASE FITTING		08
04	0503010300	5/32" X 1" COTTERPIN		08
05	0511015961	LOCK BUSHING		04
06	0503030679	BOLT 1/2 UNC X 1.1/4 CSPC G.5 ZN		04
07	0503010060	1/2" NUT		04
08	0521014021	1/2" X 4.5" X 5.4" FASTENER		08
09	0511017302	FLAT WASHER		16
10	0503010019	1/2" SPRING WASHER		16
11	0503010060	1/2" NUT		16
12	0501058241	WHEEL SUPPORT CHAIN TENSIONER	42	04
13	0571018906	AXLE MOTOR 1950		02
14	0501018466	FLAT WASHER		02
15	0501052560	MOTOR AXLE SIGNAL	127	02
16	0511051434	TRANSMISSION ACTUATOR	128	04
17	0511047069	RIGHT SIDE TRANSMISSION ACTUATOR	129	01
18	0511047070	LEFT SIDE TRANSMISSION ACTUATOR	130	01
19	0511061759	22Z P12,70 FQ 3/4" GEAR		02
20	0501053788	3/4 SQUARE AXLE FASTENER	70	02
21	0503030303	SUPPORT WASHER		04
22	0501056271	GEARBOX CLOSED BEARING	71	02
23	0503010751	C3/8" X 1.1/4" HEX BOLT G.5		04
24	0501010984	FLAT WASHER		08
25	0503010025	3/8" SPRING WASHER		04
26	0503010026	3/8" NUT		04
27	0511057265	TRANSMISSION CHAIN TENSIONER	131	02
28	0521010773	0.37" X 1.18" COUPLING SHAFT		02
29	0501010984	FLAT WASHER		06
30	0503010140	1/8" X 3/4" COTTERPIN		02
31	0571018846	DISASSEMBLE LEVER		02

Item	Code	Description	See page	QT
32	0503033942	COVER REGULATORY WHEEL		02
33	0571018844	SUPPORT RIGHT DISASSEMBLE LEVER		01
34	0571018845	SUPPORT LEFT DISASSEMBLE LEVER		01
35	0503030093	TRACTION SPRING		02
36	0503012699	BOLT 5/8NC X 2 CAPQ G.5 ZN 1K20548		04
37	0503012412	5/8 UNC SELF LOCKING NUT		04
38	0511061759	22Z P12,70 FQ 3/4" GEAR		02
39	0501053788	3/4 SQUARE AXLE FASTENER	70	02
40	0503030275	AGRICULTURAL BEARING		02
41	0501056271	GEARBOX CLOSED BEARING	71	02
42	0503010751	C3/8" X 1.1/4" HEX BOLT G.5		04
43	0501010984	FLAT WASHER		08
44	0503010025	3/8" SPRING WASHER		04
45	0503010026	3/8" NUT		04
46	0511057265	TRANSMISSION CHAIN TENSIONER	131	02
47	0511065209	20Z GEAR		02
48	0501053788	3/4 SQUARE AXLE FASTENER	70	02
49	0503030303	SUPPORT WASHER		02
50	0503010292	0.2" X 1.6" SPRING PIN		02
51	0521018630	1.4" X SQUARE 0.8" WASHER		02
52	0501056271	GEARBOX CLOSED BEARING	71	02
53	0503010751	C3/8" X 1.1/4" HEX BOLT G.5		04
54	0501010984	FLAT WASHER		08
55	0503010025	3/8" SPRING WASHER		04
56	0503010026	3/8" NUT		04
57	0501052810	TRANSMISSION CHAIN TENSIONER ASSEMBLY	132	02
58	0511050652	CHAIN TENSIONER	133	04
59	0501053653	BEARING WITH GEAR 20Z 3/4 HEX SHAFT	134	02
60	0503015637	40-1 X 56 CHAIN LINK + REDUCTION		02
61	0503014870	40-1 X 59 CHAIN LINK + MENDING		02
62	0503015001	40-1 X 153 CHAIN LINK + MENDING		02
63	0511069678	LH LOWER LEVER		02
64	0551019159	LEVER FIXER BODY		02
65	0561016468	FASTENER		02
66	0503011336	1/2" HEX SELF ADJUSTING NUT		04
67	0501010984	FLAT WASHER		04
68	0503010140	1/8" X 3/4" COTTERPIN		04
69	0521055335	RIGHT GEAR HOUSING SET	136	01
70	0521055337	LEFT GEAR HOUSING SET	138	01

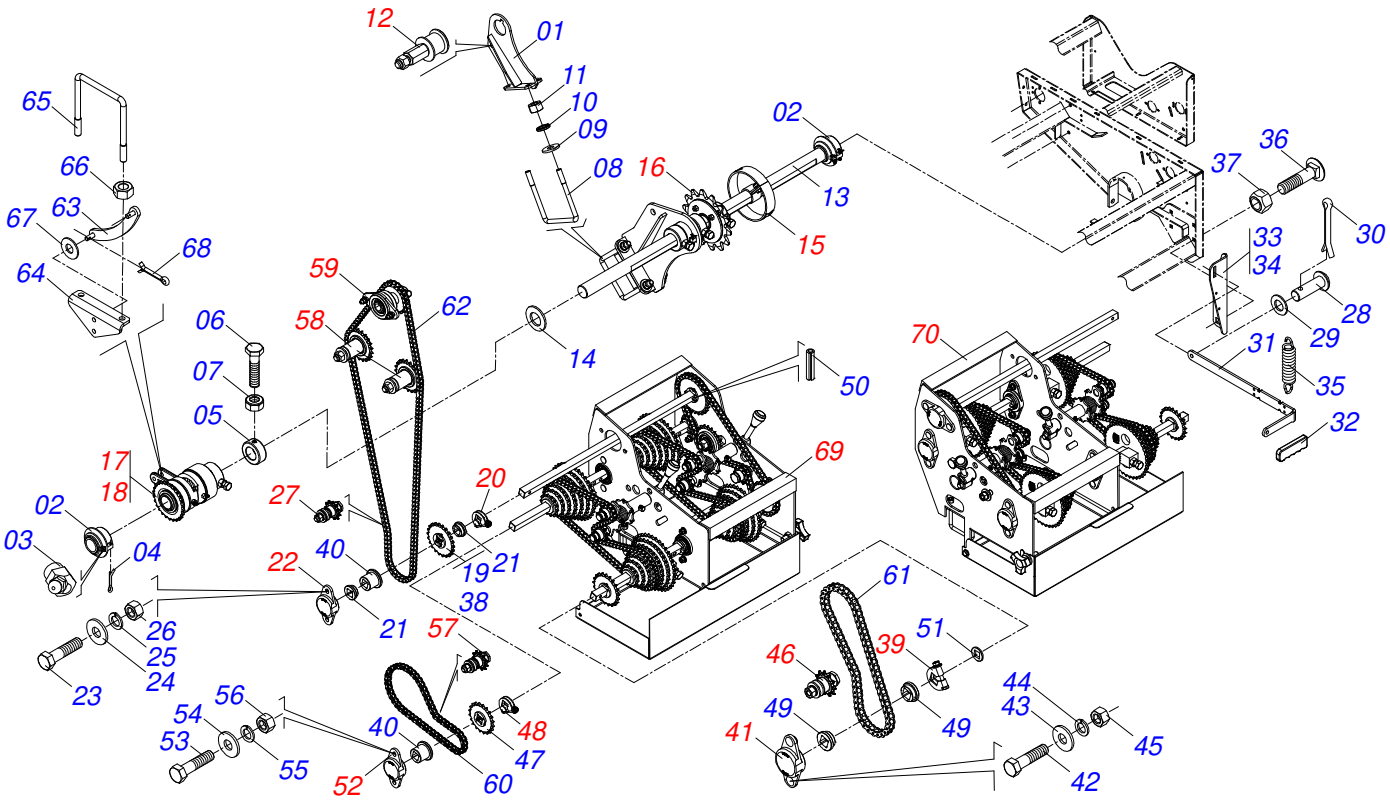

Item	Code	Description	See page	QT
01	0521065954	SUPPORT BEARING AXLE MOTOR		04
02	0501110639	BEARING		08
03	0503011099	GREASE FITTING		08
04	0503010300	5/32" X 1" COTTERPIN		08
05	0511015961	LOCK BUSHING		04
06	0503030679	BOLT 1/2 UNC X 1.1/4 CSPC G.5 ZN		04
07	0503010060	1/2" NUT		04
08	0521014021	1/2" X 4.5" X 5.4" FASTENER		08
09	0511017302	FLAT WASHER		16
10	0503010019	1/2" SPRING WASHER		16
11	0503010060	1/2" NUT		16
12	0501058241	WHEEL SUPPORT CHAIN TENSIONER	42	04
13	0571018907	AXLE MOTOR 2125		02
14	0501018466	FLAT WASHER		02
15	0501052560	MOTOR AXLE SIGNAL	127	02
16	0511051434	TRANSMISSION ACTUATOR	128	04
17	0511047069	RIGHT SIDE TRANSMISSION ACTUATOR	129	01
18	0511047070	LEFT SIDE TRANSMISSION ACTUATOR	130	01
19	0511061759	22Z P12,70 FQ 3/4" GEAR		02
20	0501053788	3/4 SQUARE AXLE FASTENER	70	02
21	0503030303	SUPPORT WASHER		04
22	0501056271	GEARBOX CLOSED BEARING	71	02
23	0503010751	C3/8" X 1.1/4" HEX BOLT G.5		04
24	0501010984	FLAT WASHER		08
25	0503010025	3/8" SPRING WASHER		04
26	0503010026	3/8" NUT		04
27	0511057265	TRANSMISSION CHAIN TENSIONER	131	02
28	0521010773	0.37" X 1.18" COUPLING SHAFT		02
29	0501010984	FLAT WASHER		06
30	0503010140	1/8" X 3/4" COTTERPIN		02
31	0571018846	DISASSEMBLE LEVER		02

Item	Code	Description	See page	QT
32	0503033942	COVER REGULATORY WHEEL		02
33	0571018844	SUPPORT RIGHT DISASSEMBLE LEVER		01
34	0571018845	SUPPORT LEFT DISASSEMBLE LEVER		01
35	0503030093	TRACTION SPRING		02
36	0503012407	5/8" X 1-1/2" BOLT		04
37	0503012412	5/8 UNC SELF LOCKING NUT		04
38	0511061759	22Z P12,70 FQ 3/4" GEAR		02
39	0501053788	3/4 SQUARE AXLE FASTENER	70	02
40	0503030275	AGRICULTURAL BEARING		02
41	0501056271	GEARBOX CLOSED BEARING	71	02
42	0503010751	C3/8" X 1.1/4" HEX BOLT G.5		04
43	0501010984	FLAT WASHER		08
44	0503010025	3/8" SPRING WASHER		04
45	0503010026	3/8" NUT		04
46	0511057265	TRANSMISSION CHAIN TENSIONER	131	02
47	0511065209	20Z GEAR		02
48	0501053788	3/4 SQUARE AXLE FASTENER	70	02
49	0503030303	SUPPORT WASHER		02
50	0503010292	0.2" X 1.6" SPRING PIN		02
51	0521018630	1.4" X SQUARE 0.8" WASHER		02
52	0501056271	GEARBOX CLOSED BEARING	71	02
53	0503010751	C3/8" X 1.1/4" HEX BOLT G.5		04
54	0501010984	FLAT WASHER		08
55	0503010025	3/8" SPRING WASHER		04
56	0503010026	3/8" NUT		04
57	0501052810	TRANSMISSION CHAIN TENSIONER ASSEMBLY	132	02
58	0511050652	CHAIN TENSIONER	133	04
59	0501053653	BEARING WITH GEAR 20Z 3/4 HEX SHAFT	134	02
60	0503015637	40-1 X 56 CHAIN LINK + REDUCTION		02
61	0503014870	40-1 X 59 CHAIN LINK + MENDING		02
62	0503015001	40-1 X 153 CHAIN LINK + MENDING		02
63	0511069678	LH LOWER LEVER		02
64	0551019159	LEVER FIXER BODY		02
65	0561016468	FASTENER		02
66	0503011336	1/2" HEX SELF ADJUSTING NUT		04
67	0501010984	FLAT WASHER		04
68	0503010140	1/8" X 3/4" COTTERPIN		04
69	0521055335	RIGHT GEAR HOUSING SET	136	01
70	0521055337	LEFT GEAR HOUSING SET	138	01

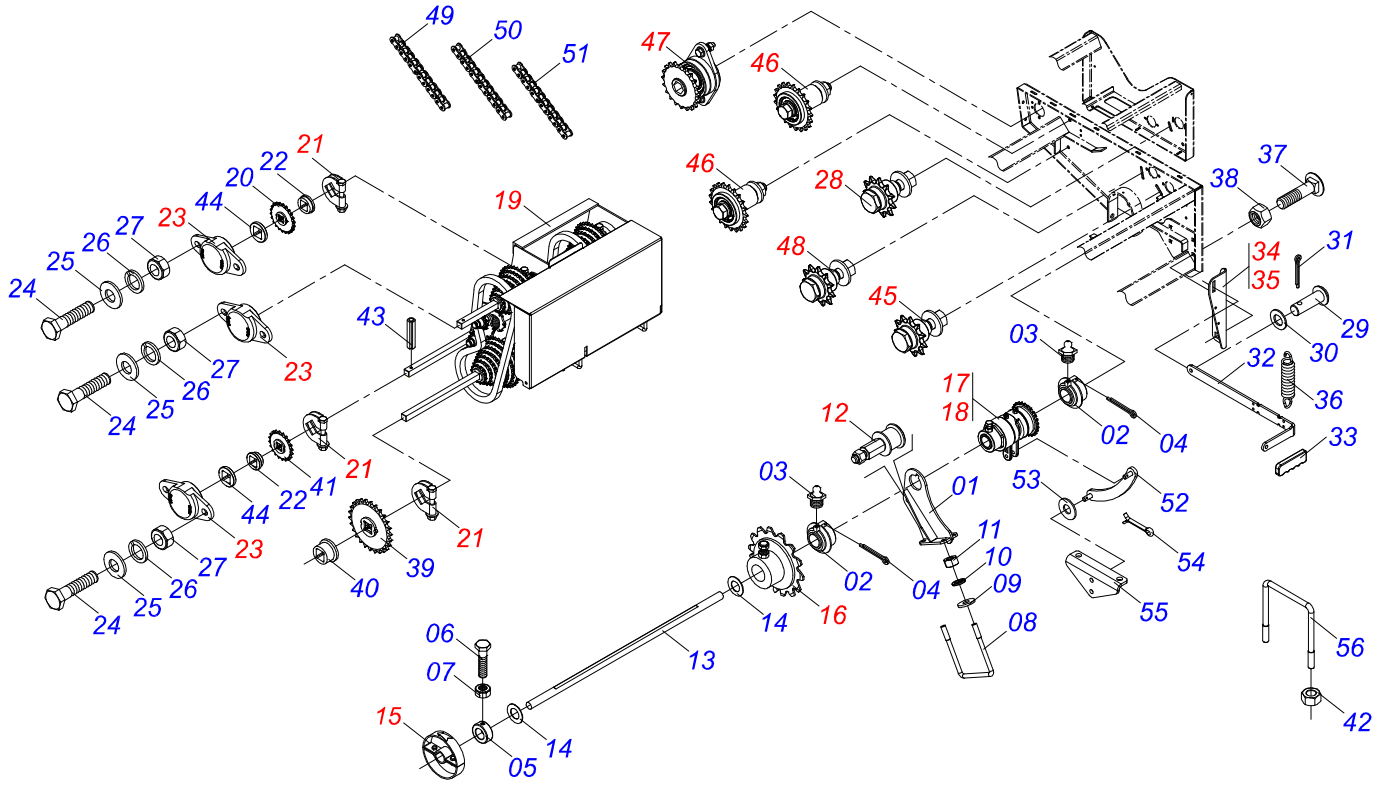

Item	Code	Description	See page	QT
01	0521065954	SUPPORT BEARING AXLE MOTOR		04
02	0501110639	BEARING		08
03	0503011099	GREASE FITTING		08
04	0503010300	5/32" X 1" COTTERPIN		08
05	0511015961	LOCK BUSHING		04
06	0503030679	BOLT 1/2 UNC X 1.1/4 CSPC G.5 ZN		04
07	0503010060	1/2" NUT		04
08	0521014021	1/2" X 4.5" X 5.4" FASTENER		08
09	0511017302	FLAT WASHER		16
10	0503010019	1/2" SPRING WASHER		16
11	0503010060	1/2" NUT		16
12	0501058241	WHEEL SUPPORT CHAIN TENSIONER	42	04
13	0571018908	MOTOR SHAFT 2350		02
14	0501018466	FLAT WASHER		02
15	0501052560	MOTOR AXLE SIGNAL	127	02
16	0511051434	TRANSMISSION ACTUATOR	128	04
17	0511047069	RIGHT SIDE TRANSMISSION ACTUATOR	129	01
18	0511047070	LEFT SIDE TRANSMISSION ACTUATOR	130	01
19	0511058383	GEARBOX RIGHT/LEFT ASSY		01
20	0511061759	22Z P12,70 FQ 3/4" GEAR		02
21	0501053788	3/4 SQUARE AXLE FASTENER	70	02
22	0503030303	SUPPORT WASHER		04
23	0501056271	GEARBOX CLOSED BEARING	71	02
24	0503010751	C3/8" X 1.1/4" HEX BOLT G.5		04
25	0501010984	FLAT WASHER		08
26	0503010025	3/8" SPRING WASHER		04
27	0503010026	3/8" NUT		04
28	0511059238	CHAIN TENSIONER		02
29	0521010773	0.37" X 1.18" COUPLING SHAFT		02
30	0501010984	FLAT WASHER		06
31	0503010140	1/8" X 3/4" COTTERPIN		02

Item	Code	Description	See page	QT
32	0571018846	DISASSEMBLE LEVER		02
33	0503033942	COVER REGULATORY WHEEL		02
34	0571018844	SUPPORT RIGHT DISASSEMBLE LEVER		01
35	0571018845	SUPPORT LEFT DISASSEMBLE LEVER		01
36	0503030093	TRACTION SPRING		02
37	0503012407	5/8" X 1-1/2" BOLT		04
37.	0503012699	BOLT 5/8NC X 2 CAPQ G.5 ZN 1K20548		04
38	0503012412	5/8 UNC SELF LOCKING NUT		04
39	0511061759	22Z P12,70 FQ 3/4" GEAR		02
40	0503030275	AGRICULTURAL BEARING		02
41	0511065209	20Z GEAR		02
42	0503011336	1/2" HEX SELF ADJUSTING NUT		04
43	0503010292	0.2" X 1.6" SPRING PIN		02
44	0521018630	1.4" X SQUARE 0.8" WASHER		02
45	0501052810	TRANSMISSION CHAIN TENSIONER ASSEMBLY	132	02
46	0511050652	CHAIN TENSIONER	133	04
47	0501053653	BEARING WITH GEAR 20Z 3/4 HEX SHAFT	134	02
48	0511057265	TRANSMISSION CHAIN TENSIONER	131	01
49	0503015637	40-1 X 56 CHAIN LINK + REDUCTION		02
50	0503014870	40-1 X 59 CHAIN LINK + MENDING		02
51	0503015001	40-1 X 153 CHAIN LINK + MENDING		02
52	0511069678	LH LOWER LEVER		02
53	0501010984	FLAT WASHER		04
54	0503010140	1/8" X 3/4" COTTERPIN		04
55	0551019159	LEVER FIXER BODY		02
56	0561016468	FASTENER		02

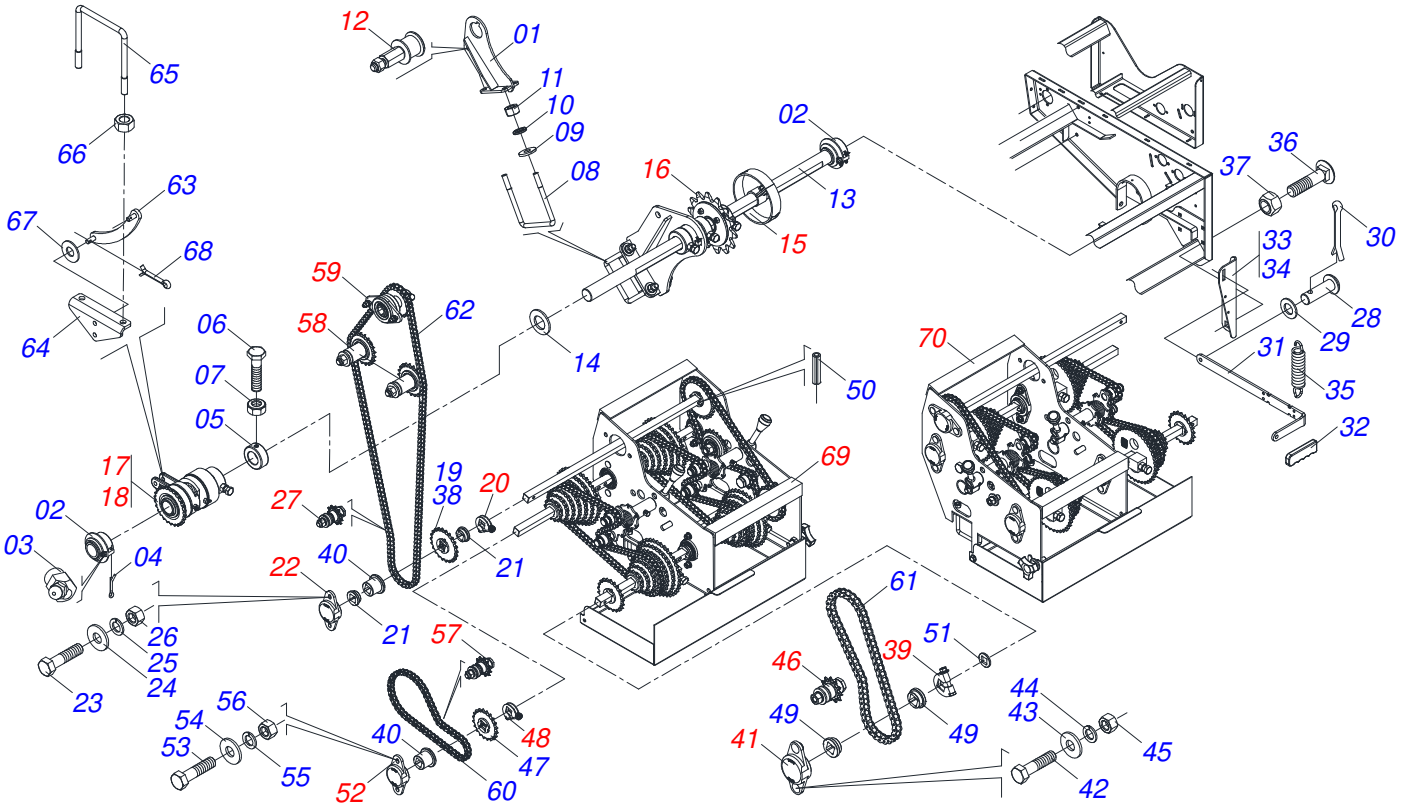

Item	Code	Description	See page	QT
01	0521065954	SUPPORT BEARING AXLE MOTOR		04
02	0501110639	BEARING		08
03	0503011099	GREASE FITTING		08
04	0503010300	5/32" X 1" COTTERPIN		08
05	0511015961	LOCK BUSHING		04
06	0503030679	BOLT 1/2 UNC X 1.1/4 CSPC G.5 ZN		04
07	0503010060	1/2" NUT		04
08	0521014021	1/2" X 4.5" X 5.4" FASTENER		08
09	0511017302	FLAT WASHER		16
10	0503010019	1/2" SPRING WASHER		16
11	0503010060	1/2" NUT		16
12	0501058241	WHEEL SUPPORT CHAIN TENSIONER	42	04
13	0571018908	MOTOR SHAFT 2350		02
14	0501018466	FLAT WASHER		02
15	0501052560	MOTOR AXLE SIGNAL	127	02
16	0511051434	TRANSMISSION ACTUATOR	128	04
17	0511047069	RIGHT SIDE TRANSMISSION ACTUATOR	129	01
18	0511047070	LEFT SIDE TRANSMISSION ACTUATOR	130	01
19	0511061759	22Z P12,70 FQ 3/4" GEAR		02
20	0501053788	3/4 SQUARE AXLE FASTENER	70	02
21	0503030303	SUPPORT WASHER		04
22	0501056271	GEARBOX CLOSED BEARING	71	02
23	0503010751	C3/8" X 1.1/4" HEX BOLT G.5		04
24	0501010984	FLAT WASHER		08
25	0503010025	3/8" SPRING WASHER		04
26	0503010026	3/8" NUT		04
27	0511057265	TRANSMISSION CHAIN TENSIONER	131	02
28	0521010773	0.37" X 1.18" COUPLING SHAFT		02
29	0501010984	FLAT WASHER		06
30	0503010140	1/8" X 3/4" COTTERPIN		02
31	0571018846	DISASSEMBLE LEVER		02

Item	Code	Description	See page	QT
32	0503033942	COVER REGULATORY WHEEL		02
33	0571018844	SUPPORT RIGHT DISASSEMBLE LEVER		01
34	0571018845	SUPPORT LEFT DISASSEMBLE LEVER		01
35	0503030093	TRACTION SPRING		02
36	0503012407	5/8" X 1-1/2" BOLT		04
37	0503012412	5/8 UNC SELF LOCKING NUT		04
38	0511061759	22Z P12,70 FQ 3/4" GEAR		02
39	0501053788	3/4 SQUARE AXLE FASTENER	70	02
40	0503030275	AGRICULTURAL BEARING		02
41	0501056271	GEARBOX CLOSED BEARING	71	02
42	0503010751	C3/8" X 1.1/4" HEX BOLT G.5		04
43	0501010984	FLAT WASHER		08
44	0503010025	3/8" SPRING WASHER		04
45	0503010026	3/8" NUT		04
46	0511057265	TRANSMISSION CHAIN TENSIONER	131	02
47	0511065209	20Z GEAR		02
48	0501053788	3/4 SQUARE AXLE FASTENER	70	02
49	0503030303	SUPPORT WASHER		02
50	0503010292	0.2" X 1.6" SPRING PIN		02
51	0521018630	1.4" X SQUARE 0.8" WASHER		02
52	0501056271	GEARBOX CLOSED BEARING	71	02
53	0503010751	C3/8" X 1.1/4" HEX BOLT G.5		04
54	0501010984	FLAT WASHER		08
55	0503010025	3/8" SPRING WASHER		04
56	0503010026	3/8" NUT		04
57	0501052810	TRANSMISSION CHAIN TENSIONER ASSEMBLY	132	02
58	0511050652	CHAIN TENSIONER	133	04
59	0501053653	BEARING WITH GEAR 20Z 3/4 HEX SHAFT	134	02
60	0503015637	40-1 X 56 CHAIN LINK + REDUCTION		02
61	0503014870	40-1 X 59 CHAIN LINK + MENDING		02
62	0503015001	40-1 X 153 CHAIN LINK + MENDING		02
63	0511069678	LH LOWER LEVER		02
64	0551019159	LEVER FIXER BODY		02
65	0561016468	FASTENER		02
66	0503011336	1/2" HEX SELF ADJUSTING NUT		04
67	0501010984	FLAT WASHER		04
68	0503010140	1/8" X 3/4" COTTERPIN		04
69	0521055335	RIGHT GEAR HOUSING SET	136	01
70	0521055337	LEFT GEAR HOUSING SET	138	01

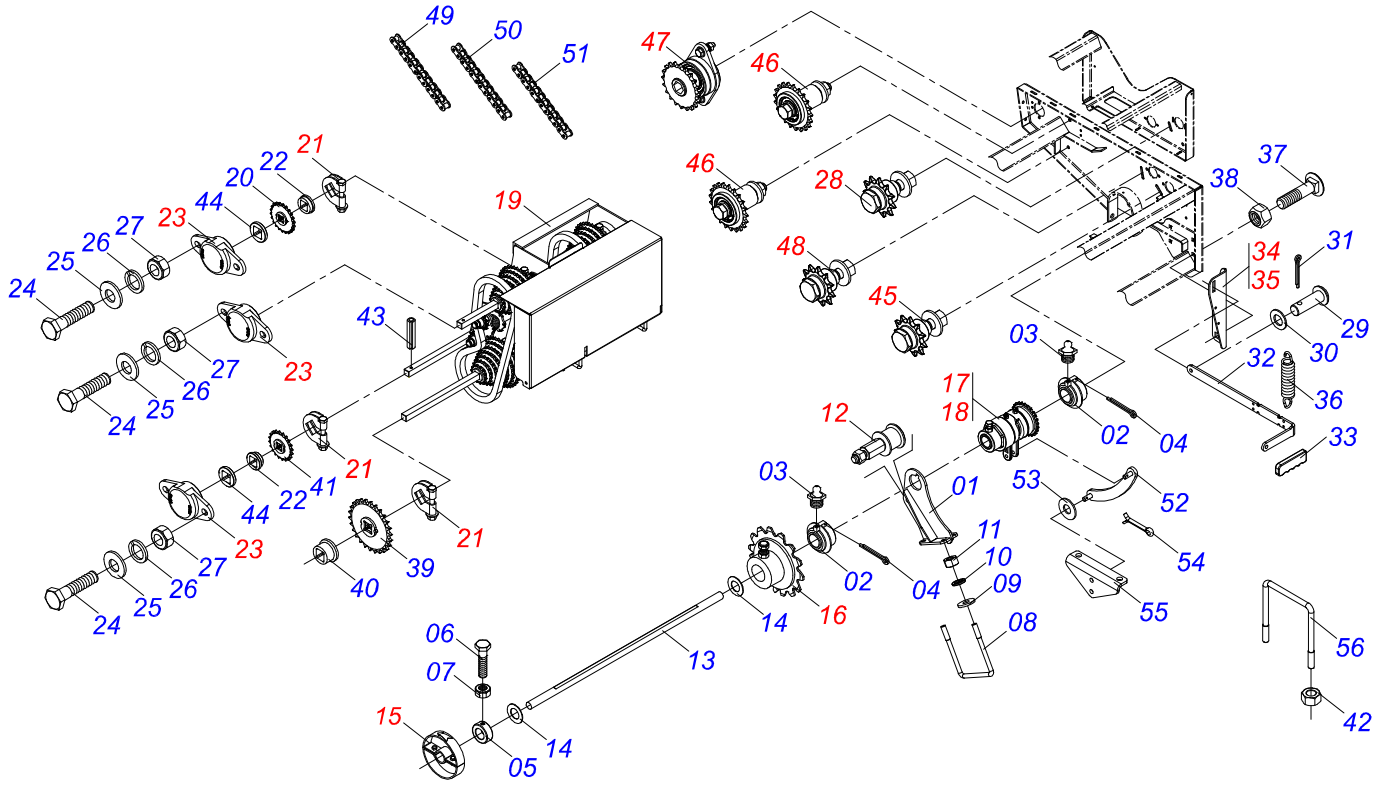

Item	Code	Description	See page	QT
01	0521065954	SUPPORT BEARING AXLE MOTOR		04
02	0501110639	BEARING		08
03	0503011099	GREASE FITTING		08
04	0503010300	5/32" X 1" COTTERPIN		08
05	0511015961	LOCK BUSHING		04
06	0503030679	BOLT 1/2 UNC X 1.1/4 CSPC G.5 ZN		04
07	0503010060	1/2" NUT		04
08	0521014021	1/2" X 4.5" X 5.4" FASTENER		08
09	0511017302	FLAT WASHER		16
10	0503010019	1/2" SPRING WASHER		16
11	0503010060	1/2" NUT		16
12	0501058241	WHEEL SUPPORT CHAIN TENSIONER	42	04
13	0571018909	MOTOR SHAFT 2600		02
14	0501018466	FLAT WASHER		02
15	0501052560	MOTOR AXLE SIGNAL	127	02
16	0511051434	TRANSMISSION ACTUATOR	128	04
17	0511047069	RIGHT SIDE TRANSMISSION ACTUATOR	129	01
18	0511047070	LEFT SIDE TRANSMISSION ACTUATOR	130	01
19	0511058383	GEARBOX RIGHT/LEFT ASSY		01
20	0511061759	22Z P12,70 FQ 3/4" GEAR		02
21	0501053788	3/4 SQUARE AXLE FASTENER	70	02
22	0503030303	SUPPORT WASHER		04
23	0501056271	GEARBOX CLOSED BEARING	71	02
24	0503010751	C3/8" X 1.1/4" HEX BOLT G.5		04
25	0501010984	FLAT WASHER		08
26	0503010025	3/8" SPRING WASHER		04
27	0503010026	3/8" NUT		04
28	0511059238	CHAIN TENSIONER		02
29	0521010773	0.37" X 1.18" COUPLING SHAFT		02
30	0501010984	FLAT WASHER		06
31	0503010140	1/8" X 3/4" COTTERPIN		02

Item	Code	Description	See page	QT
32	0571018846	DISASSEMBLE LEVER		02
33	0503033942	COVER REGULATORY WHEEL		02
34	0571018844	SUPPORT RIGHT DISASSEMBLE LEVER		01
35	0571018845	SUPPORT LEFT DISASSEMBLE LEVER		01
36	0503030093	TRACTION SPRING		02
37	0503012407	5/8" X 1-1/2" BOLT		04
37.	0503012699	BOLT 5/8NC X 2 CAPQ G.5 ZN 1K20548		04
38	0503012412	5/8 UNC SELF LOCKING NUT		04
39	0511061759	22Z P12,70 FQ 3/4" GEAR		02
40	0503030275	AGRICULTURAL BEARING		02
41	0511065209	20Z GEAR		02
42	0503011336	1/2" HEX SELF ADJUSTING NUT		04
43	0503010292	0.2" X 1.6" SPRING PIN		02
44	0521018630	1.4" X SQUARE 0.8" WASHER		02
45	0501052810	TRANSMISSION CHAIN TENSIONER ASSEMBLY	132	02
46	0511050652	CHAIN TENSIONER	133	04
47	0501053653	BEARING WITH GEAR 20Z 3/4 HEX SHAFT	134	02
48	0511057265	TRANSMISSION CHAIN TENSIONER	131	01
49	0503015637	40-1 X 56 CHAIN LINK + REDUCTION		02
50	0503014870	40-1 X 59 CHAIN LINK + MENDING		02
51	0503015001	40-1 X 153 CHAIN LINK + MENDING		02
52	0511069678	LH LOWER LEVER		02
53	0501010984	FLAT WASHER		04
54	0503010140	1/8" X 3/4" COTTERPIN		04
55	0551019159	LEVER FIXER BODY		02
56	0561016468	FASTENER		02

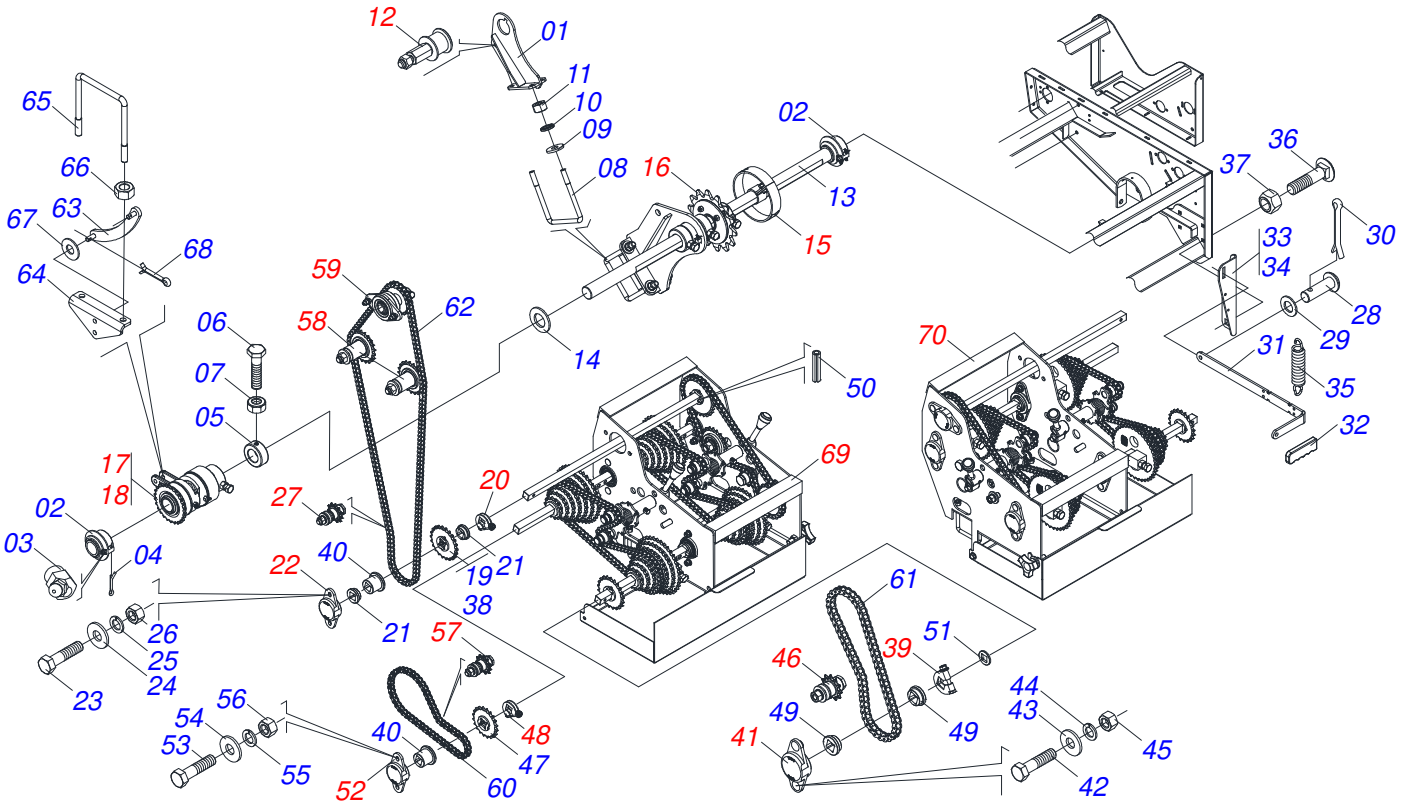

Item	Code	Description	See page	QT
01	0521065954	SUPPORT BEARING AXLE MOTOR		04
02	0501110639	BEARING		08
03	0503011099	GREASE FITTING		08
04	0503010300	5/32" X 1" COTTERPIN		08
05	0511015961	LOCK BUSHING		04
06	0503030679	BOLT 1/2 UNC X 1.1/4 CSPC G.5 ZN		04
07	0503010060	1/2" NUT		04
08	0521014021	1/2" X 4.5" X 5.4" FASTENER		08
09	0511017302	FLAT WASHER		16
10	0503010019	1/2" SPRING WASHER		16
11	0503010060	1/2" NUT		16
12	0501058241	WHEEL SUPPORT CHAIN TENSIONER	42	04
13	0581012892	MOTOR SHAFT		02
14	0501018466	FLAT WASHER		02
15	0501052560	MOTOR AXLE SIGNAL	127	02
16	0511051434	TRANSMISSION ACTUATOR	128	04
17	0511047069	RIGHT SIDE TRANSMISSION ACTUATOR	129	01
18	0511047070	LEFT SIDE TRANSMISSION ACTUATOR	130	01
19	0511061759	22Z P12,70 FQ 3/4" GEAR		02
20	0501053788	3/4 SQUARE AXLE FASTENER	70	02
21	0503030303	SUPPORT WASHER		04
22	0501056271	GEARBOX CLOSED BEARING	71	02
23	0503010751	C3/8" X 1.1/4" HEX BOLT G.5		04
24	0501010984	FLAT WASHER		08
25	0503010025	3/8" SPRING WASHER		04
26	0503010026	3/8" NUT		04
27	0511057265	TRANSMISSION CHAIN TENSIONER	131	02
28	0521010773	0.37" X 1.18" COUPLING SHAFT		02
29	0501010984	FLAT WASHER		06
30	0503010140	1/8" X 3/4" COTTERPIN		02
31	0571018846	DISASSEMBLE LEVER		02

Item	Code	Description	See page	QT
32	0503033942	COVER REGULATORY WHEEL		02
33	0571018844	SUPPORT RIGHT DISASSEMBLE LEVER		01
34	0571018845	SUPPORT LEFT DISASSEMBLE LEVER		01
35	0503030093	TRACTION SPRING		02
36	0503012699	BOLT 5/8NC X 2 CAPQ G.5 ZN 1K20548		04
37	0503012412	5/8 UNC SELF LOCKING NUT		04
38	0511061759	22Z P12,70 FQ 3/4" GEAR		02
39	0501053788	3/4 SQUARE AXLE FASTENER	70	02
40	0503030275	AGRICULTURAL BEARING		02
41	0501056271	GEARBOX CLOSED BEARING	71	02
42	0503010751	C3/8" X 1.1/4" HEX BOLT G.5		04
43	0501010984	FLAT WASHER		08
44	0503010025	3/8" SPRING WASHER		04
45	0503010026	3/8" NUT		04
46	0511057265	TRANSMISSION CHAIN TENSIONER	131	02
47	0511065209	20Z GEAR		02
48	0501053788	3/4 SQUARE AXLE FASTENER	70	02
49	0503030303	SUPPORT WASHER		02
50	0503010292	0.2" X 1.6" SPRING PIN		02
51	0521018630	1.4" X SQUARE 0.8" WASHER		02
52	0501056271	GEARBOX CLOSED BEARING	71	02
53	0503010751	C3/8" X 1.1/4" HEX BOLT G.5		04
54	0501010984	FLAT WASHER		08
55	0503010025	3/8" SPRING WASHER		04
56	0503010026	3/8" NUT		04
57	0501052810	TRANSMISSION CHAIN TENSIONER ASSEMBLY	132	02
58	0511050652	CHAIN TENSIONER	133	04
59	0501053653	BEARING WITH GEAR 20Z 3/4 HEX SHAFT	134	02
60	0503015637	40-1 X 56 CHAIN LINK + REDUCTION		02
61	0503014870	40-1 X 59 CHAIN LINK + MENDING		02
62	0503015001	40-1 X 153 CHAIN LINK + MENDING		02
63	0511069678	LH LOWER LEVER		02
64	0551019159	LEVER FIXER BODY		02
65	0561016468	FASTENER		02
66	0503011336	1/2" HEX SELF ADJUSTING NUT		04
67	0501010984	FLAT WASHER		04
68	0503010140	1/8" X 3/4" COTTERPIN		04
69	0521055335	RIGHT GEAR HOUSING SET	136	01
70	0521055337	LEFT GEAR HOUSING SET	138	01

MOTOR AXLE SIGNAL

0501052560

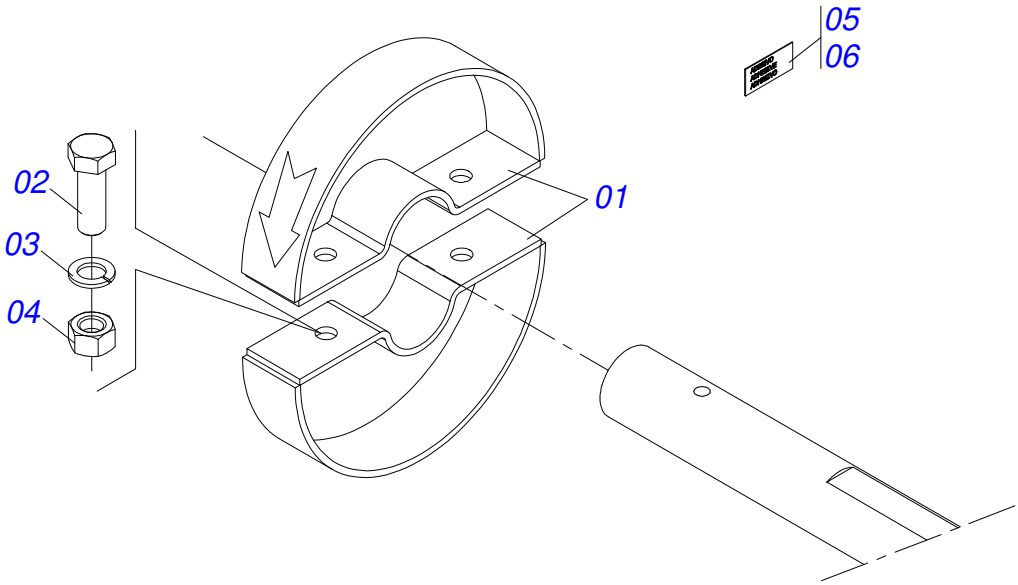

Item	Code	Description	See page	QT
01	0503031825	AXLE MOTOR SLOW-MOVING		02
02	0503010240	BOLT		02
03	0503010179	LOCK WASHER		02
04	0503010337	5/16" NUT		02
05	0503031584	ADHESIVE LABEL		01
06	0503031585	ADHESIVE LABEL		01

TRANSMISSION ACTUATOR

0511051434

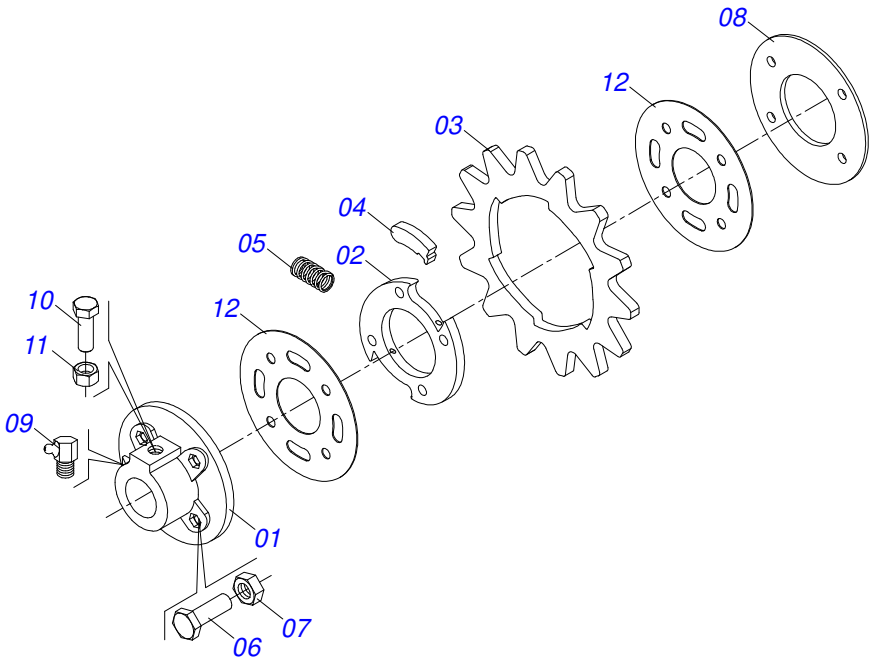

Item	Code	Description	See page	QT
01	0502012696	RIGHT RATCHET HANDLE BODY		01
02	0571010151	GRAGGER RATCHET BODY		01
03	0561019923	RATCHET PULLER GEAR		01
04	0551019100	LOCK RATCHET		02
05	0503030051	0.2" X 1" X 0.1" COMPRESSION SPRING		02
06	0503010365	NUT		04
07	0503013816	5/16" LOCKNUT		04
08	0571010164	SEAT SIDE OF RATCHET		01
09	0503010004	1890 GREASE FITTING		01
10	0503030678	BOLT 1/2 UNC X 1.1/2 CSPC G.5 ZN		01
11	0503010060	1/2" NUT		01
12	0571010763	FLANGE WASHER		02

RIGHT SIDE TRANSMISSION ACTUATOR

0511047069

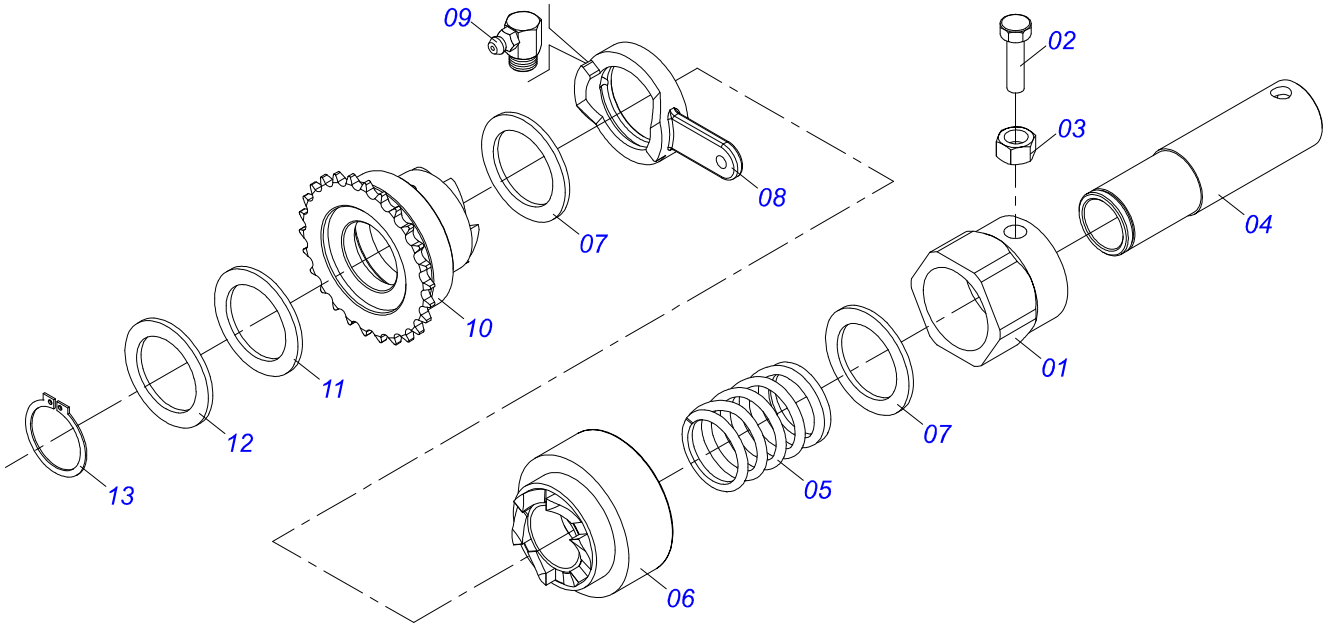

Item	Code	Description	See page	QT
01	0502011996	SLEEVE FIXER		01
02	0503030678	BOLT 1/2 UNC X 1.1/2 CSPC G.5 ZN		01
03	0503010060	1/2" NUT		01
04	0521017590	GUIDE AXLE		01
05	0503030553	2.3"X 2.5"X 0.2"COMPRESSION SPRING		01
06	0502012009	DRIVING AXLE RIGHT FOLLOWER		01
07	0501019734	FLAT WASHER		02
08	0502010710	RIGHT CAM, SMALLER		02
09	0503010003	1845 GREASE FITTING		02
10	0502012539	26Z P12,7 GEAR		01
11	0501019735	FLAT WASHER		01
12	0521017593	FLAT WASHER		01
13	0503010542	501045 CLAMPING RING (FOR AXLE)		01

LEFT SIDE TRANSMISSION ACTUATOR

0511047070

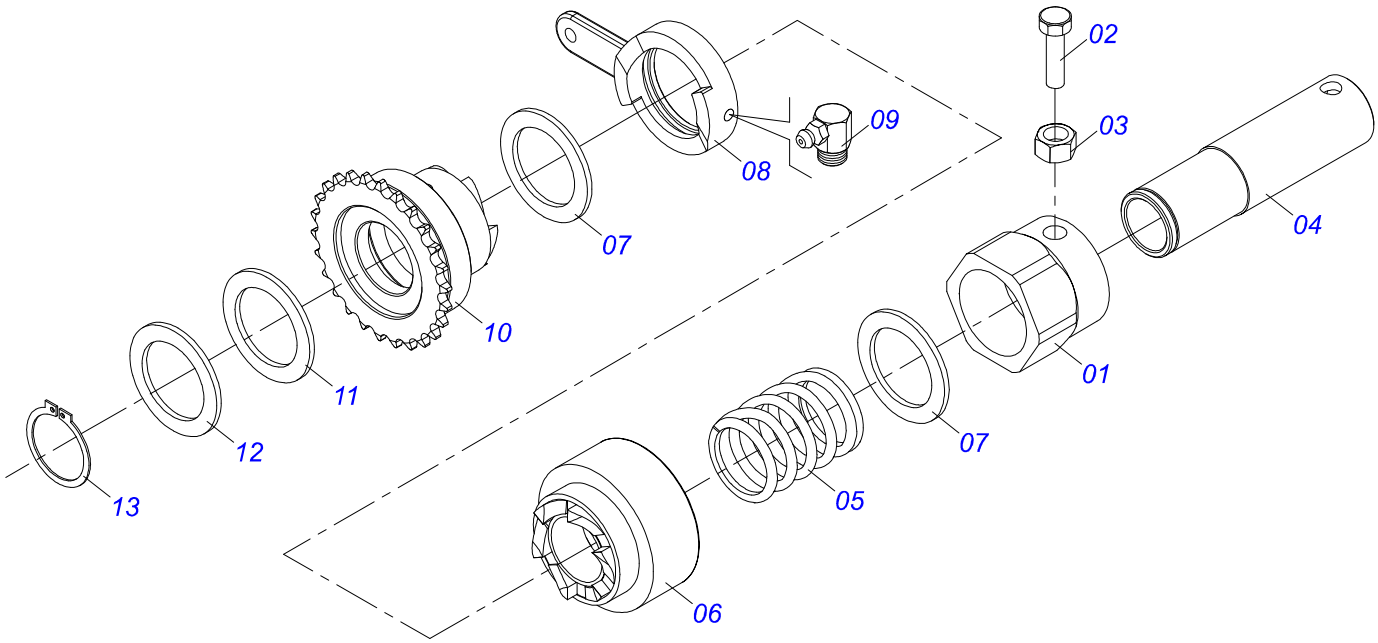

Item	Code	Description	See page	QT
01	0502011996	SLEEVE FIXER		01
02	0503030678	BOLT 1/2 UNC X 1.1/2 CSPC G.5 ZN		01
03	0503010060	1/2" NUT		01
04	0521017590	GUIDE AXLE		01
05	0503030553	2.3"X 2.5"X 0.2"COMPRESSION SPRING		01
06	0502011995	LH DRIVING AXLE FOLLOWER		01
07	0501019734	FLAT WASHER		02
08	0502010720	RIGHT CAM, SMALLER		02
09	0503010003	1845 GREASE FITTING		02
10	0502012540	26Z P12,7 GEAR		01
11	0501019735	FLAT WASHER		01
12	0521017593	FLAT WASHER		01
13	0503010542	501045 CLAMPING RING (FOR AXLE)		01

TRANSMISSION CHAIN TENSIONER

0511057265

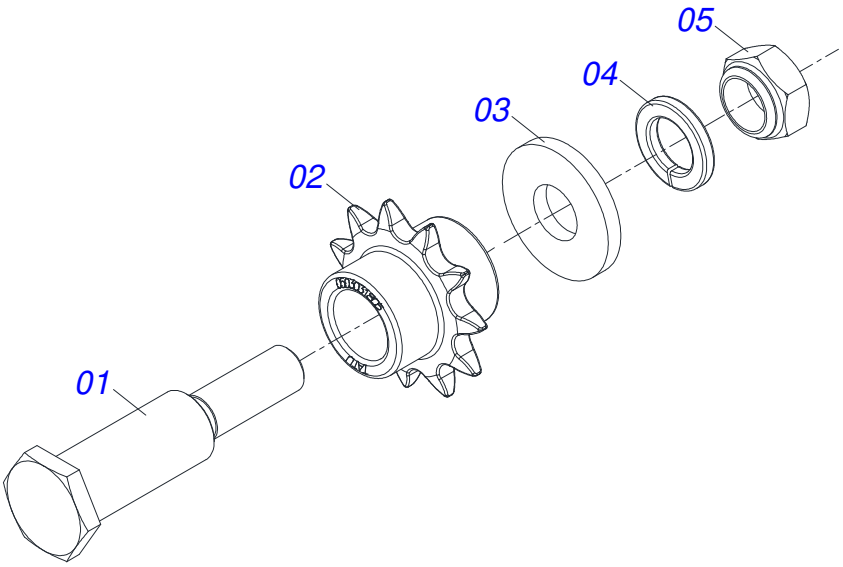

Item	Code	Description	See page	QT
01	0531019479	AXLE CHAIN GEAR		01
02	0503031805	11Z 1/2" GEAR		01
03	0511017302	FLAT WASHER		03
04	0503010019	1/2" SPRING WASHER		01
05	0503010060	1/2" NUT		01

TRANSMISSION CHAIN TENSIONER ASSEMBLY

0501052810

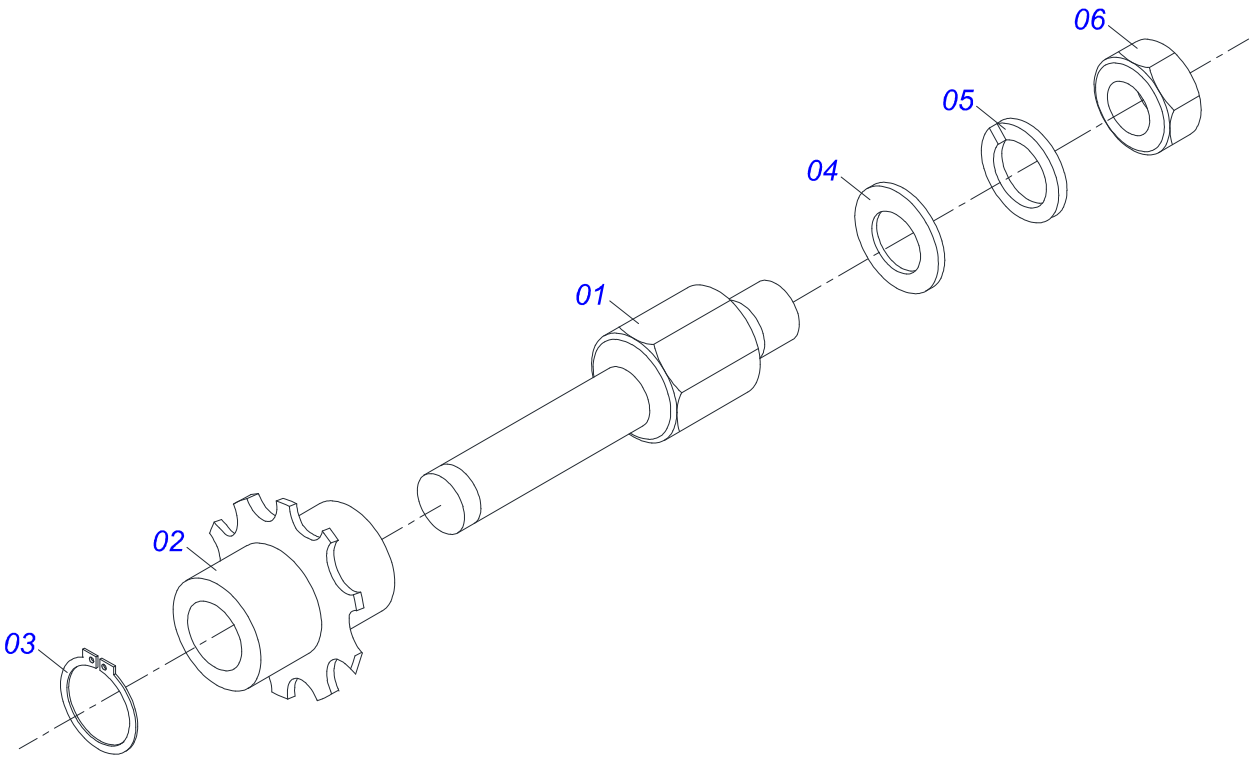

Item	Code	Description	See page	QT
01	0541011713	TENSIONER CHAIN LOWER AXLE		01
02	0503031805	11Z 1/2" GEAR		01
03	0503010302	501019 SEAL RING		01
04	0511017302	FLAT WASHER		01
05	0503010019	1/2" SPRING WASHER		01
06	0503010060	1/2" NUT		01

CHAIN TENSIONER

0511050652

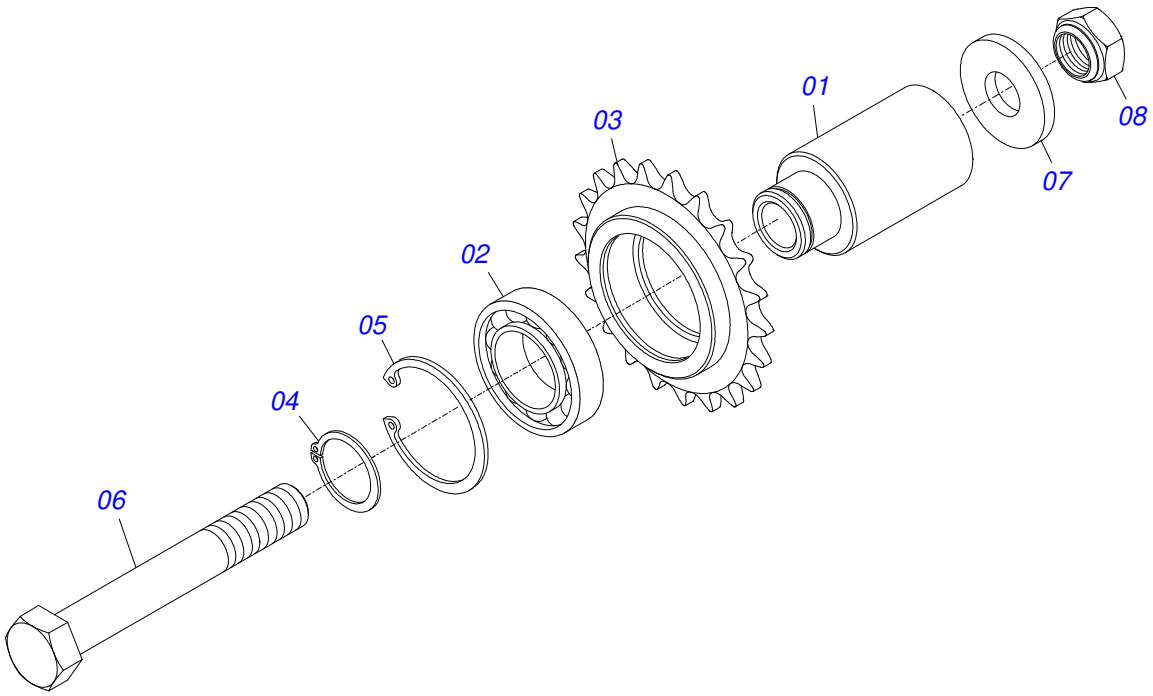

Item	Code	Description	See page	QT
01	0551019171	CHAIN TIGHTENER AXLE		01
02	0503011410	ROLLER BEARING		01
03	0511062169	21Z P 1/2" GEAR		01
04	0503010406	501025 CLAMPING RING (FOR AXLE)		01
05	0503011105	SEAL RING		01
06	0501011027	5/8" X 3-3/4" BOLT		01
07	0571010265	16.5 X 40 X 3 FLAT WASHER		01
08	0503012412	5/8 UNC SELF LOCKING NUT		01

BEARING WITH GEAR 20Z 3/4 HEX SHAFT

0501053653

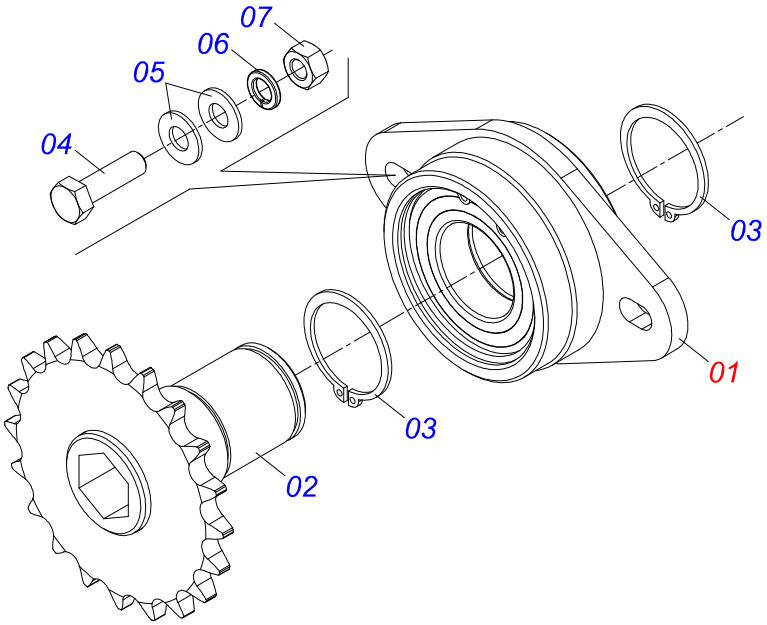

Item	Code	Description	See page	QT
01	0501053654	3/4 SEED TRANSMISSION DOUBLE BEARING	135	01
02	0511063185	20Z GEAR WITH HEX HOLE AXLE 20		01
03	0503010707	501030 CLAMPING RING (FOR AXLE)		02
04	0503010365	NUT		02
05	0501010694	FLAT WASHER		04
06	0503010179	LOCK WASHER		02
07	0503010337	5/16" NUT		02

3/4 SEED TRANSMISSION DOUBLE BEARING

0501053654

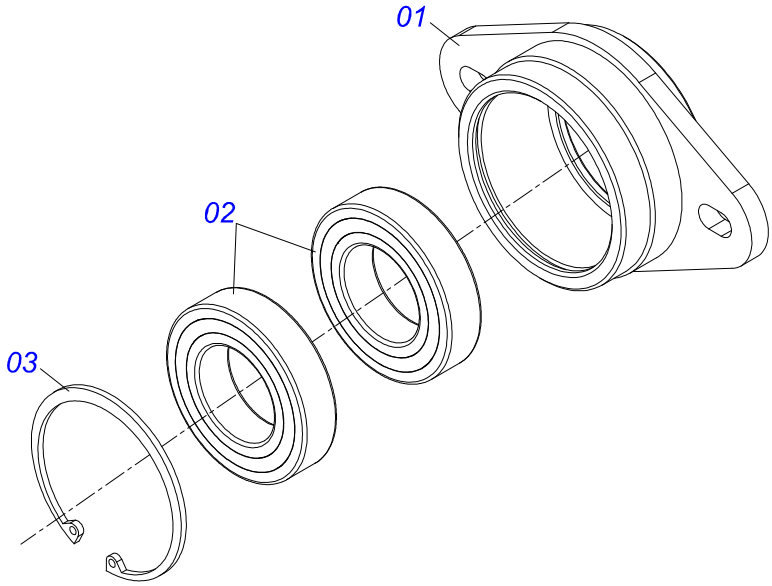

Item	Code	Description	See page	QT
01	0502012031	HOUSING BEARING		01
02	0503012861	6006 2RS BALL BEARING		02
03	0503012858	502075 CLAMPING RING (FOR HOLE)		01

RIGHT GEAR HOUSING SET

0521055335

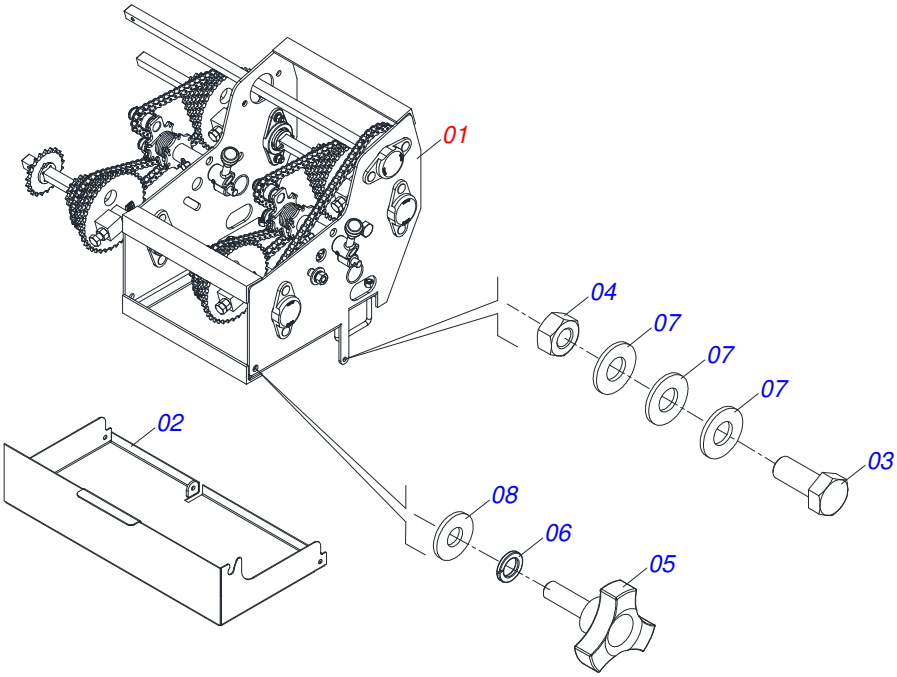

Item	Code	Description	See page	QT
01	0511058381	RIGHT GEAR HOUSING	137	01
02	0521065955	RH GEAR BOX COVER		01
03	0503010240	BOLT		02
04	0503013816	5/16" LOCKNUT		02
05	0503033682	KNOB 3P K3 60A M12 X 40		01
06	0503010019	1/2" SPRING WASHER		01
07	0501010694	FLAT WASHER		06
08	0511017302	FLAT WASHER		01

RIGHT GEAR HOUSING

0511058381

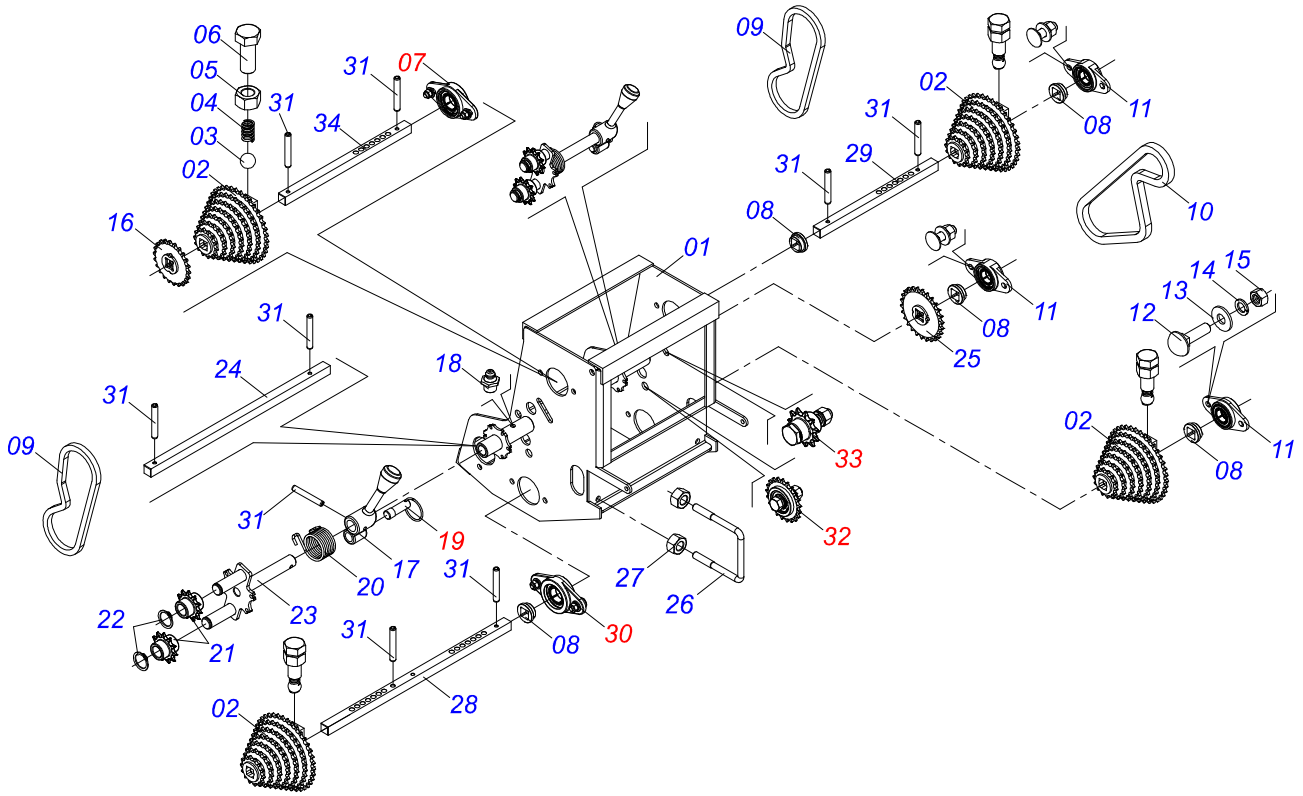

Item	Code	Description	See page	QT
01	0521065939	RIGHT GEAR BOX		01
02	0511060396	DRIVE/DRIVEN AXLE CONE		04
03	0503012389	1/2 BALL		04
04	0503031512	0.4" X 0.1"X 2" X 0.6" SPRING		04
05	0503010060	1/2" NUT		04
06	0503010395	1/2" X 1-1/4" BOLT		04
07	0501056447	CENTRAL DOUBLE GEAR HOUSING BEARING	140	01
08	0503030303	SUPPORT WASHER		06
09	0503012204	40-1 CHAIN X 82 LINK + RED		02
10	0503012143	78 CHAIN X 40-1 LINK + REDUCTION		01
11	0501056271	GEARBOX CLOSED BEARING	71	03
12	0503011953	5/16" X 1" BOLT		06
13	0501010694	FLAT WASHER		06
14	0503010179	LOCK WASHER		06
15	0503010337	5/16" NUT		06
16	0511061758	21Z GEAR		01
17	0502011758	REAR TENSIONER LEVER		02
18	0503010002	1800 GREASE FITTING		02
19	0501048790	AXLE WITH RING	141	02
20	0503031366	RIGHT TWISTED SPRING RECAMBIO		02
21	0503031805	11Z 1/2" GEAR		04
22	0503010302	501019 SEAL RING		04
23	0511061794	CHAIN TENSIONER		02
24	0571018903	AXLE INTERMEDIATE RECAMBIO		01
25	0511067501	26Z GEAR		01
26	0521010683	3/8 UNC FASTENER		02
27	0503010026	3/8" NUT		04
28	0571018902	GEAR BOX DRIVER AXLE		01
29	0571018900	SEED DRIVEN AXLE		01
30	0501056443	GEAR HOUSING BEARING	142	01
31	0503010292	0.2" X 1.6" SPRING PIN		08

RIGHT GEAR HOUSING

0511058381

Item	Code	Description	See page	QT
32	0511057258	TENSIONER WITH GEAR	144	01
33	0511054363	CHAIN TENSIONER	145	01
34	0571018901	DRIVEN AXLE		01

LEFT GEAR HOUSING SET

0521055337

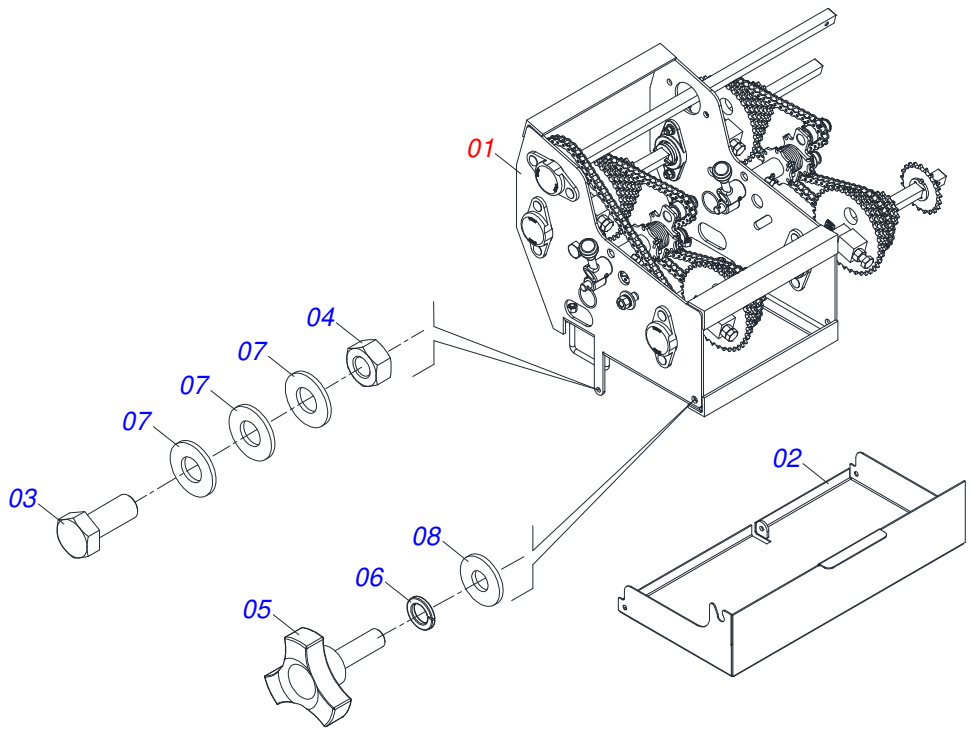

Item	Code	Description	See page	QT
01	0511058382	LEFT GEAR HOUSING	139	01
02	0521065956	LH GEAR BOX COVER		01
03	0503010240	BOLT		02
04	0503013816	5/16" LOCKNUT		02
05	0503033682	KNOB 3P K3 60A M12 X 40		01
06	0511017302	FLAT WASHER		01
07	0503010019	1/2" SPRING WASHER		01
08	0501010694	FLAT WASHER		06

LEFT GEAR HOUSING

0511058382

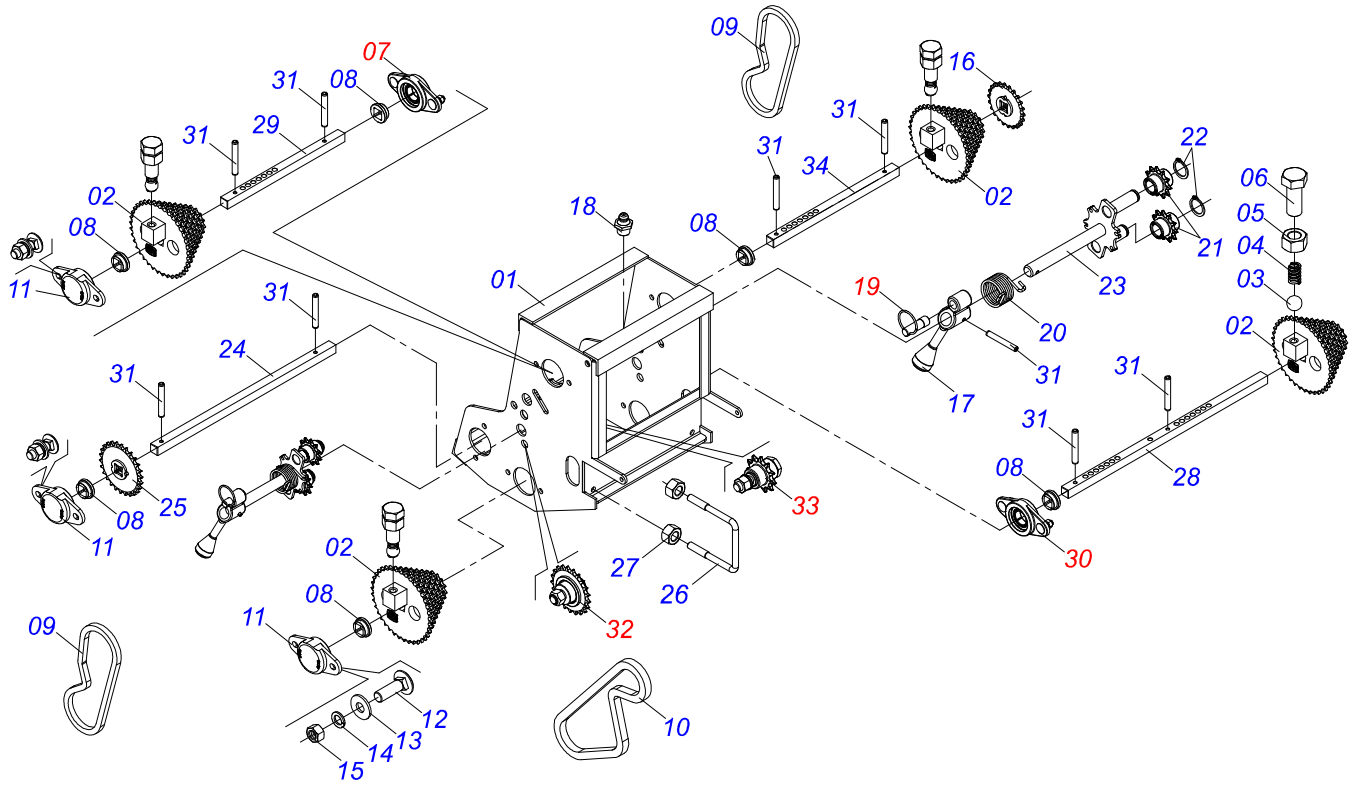

Item	Code	Description	See page	QT
01	0521065940	LETF GEAR BOX		01
02	0511060396	DRIVE/DRIVEN AXLE CONE		04
03	0503012389	1/2 BALL		04
04	0503031512	0.4" X 0.1"X 2" X 0.6" SPRING		04
05	0503010060	1/2" NUT		04
06	0503010395	1/2" X 1-1/4" BOLT		04
07	0501056447	CENTRAL DOUBLE GEAR HOUSING BEARING	140	01
08	0503030303	SUPPORT WASHER		06
09	0503012204	40-1 CHAIN X 82 LINK + RED		02
10	0503012143	78 CHAIN X 40-1 LINK + REDUCTION		01
11	0501056271	GEARBOX CLOSED BEARING	71	03
12	0503011953	5/16" X 1" BOLT		06
13	0501010694	FLAT WASHER		06
14	0503010179	LOCK WASHER		06
15	0503010337	5/16" NUT		06
16	0511061758	21Z GEAR		01
17	0502011758	REAR TENSIONER LEVER		02
18	0503010002	1800 GREASE FITTING		02
19	0501048790	AXLE WITH RING	141	02
20	0503031367	SPRING		02
21	0503031805	11Z 1/2" GEAR		04
22	0503010302	501019 SEAL RING		04
23	0511061794	CHAIN TENSIONER		02
24	0571018903	AXLE INTERMEDIATE RECAMBIO		01
25	0511067501	26Z GEAR		01
26	0521010683	3/8 UNC FASTENER		02
27	0503010026	3/8" NUT		04
28	0571018902	GEAR BOX DRIVER AXLE		01
29	0571018900	SEED DRIVEN AXLE		01
30	0501056443	GEAR HOUSING BEARING	142	01
31	0503010292	0.2" X 1.6" SPRING PIN		08

LEFT GEAR HOUSING

0511058382

Item	Code	Description	See page	QT
32	0511057258	TENSIONER WITH GEAR	144	01
33	0511054363	CHAIN TENSIONER	145	01
34	0571018901	DRIVEN AXLE		01

CENTRAL DOUBLE GEAR HOUSING BEARING

0501056447

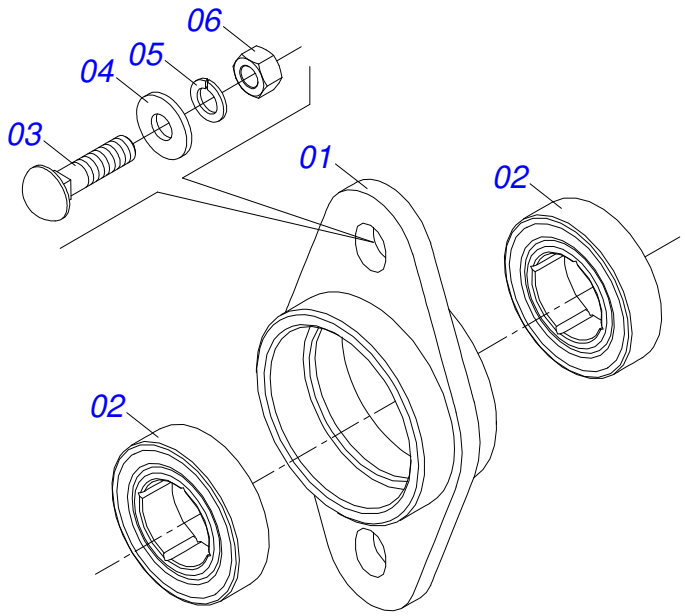

Item	Code	Description	See page	QT
01	0502011978	HOUSING CENTRAL BEARING		01
02	0503013462	BEARING WITH BALL BEARING		02
03	0503011953	5/16" X 1" BOLT		02
04	0501010694	FLAT WASHER		02
05	0503010179	LOCK WASHER		02
06	0503010337	5/16" NUT		02

AXLE WITH RING

0501048790

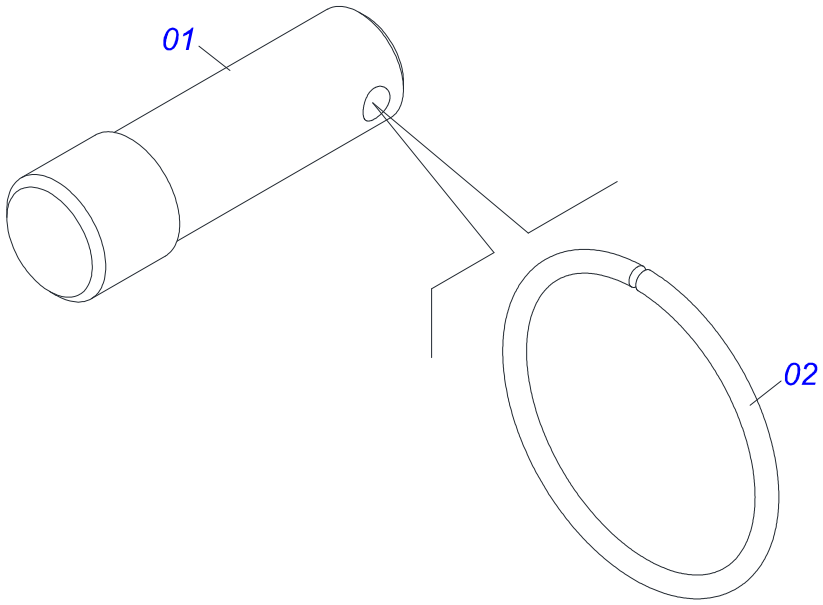

Item	Code	Description	See page	QT
01	0521012476	GEAR BOX LEVER AXLE		01
02	0503031369	LINK		01

GEAR HOUSING BEARING

0501056443

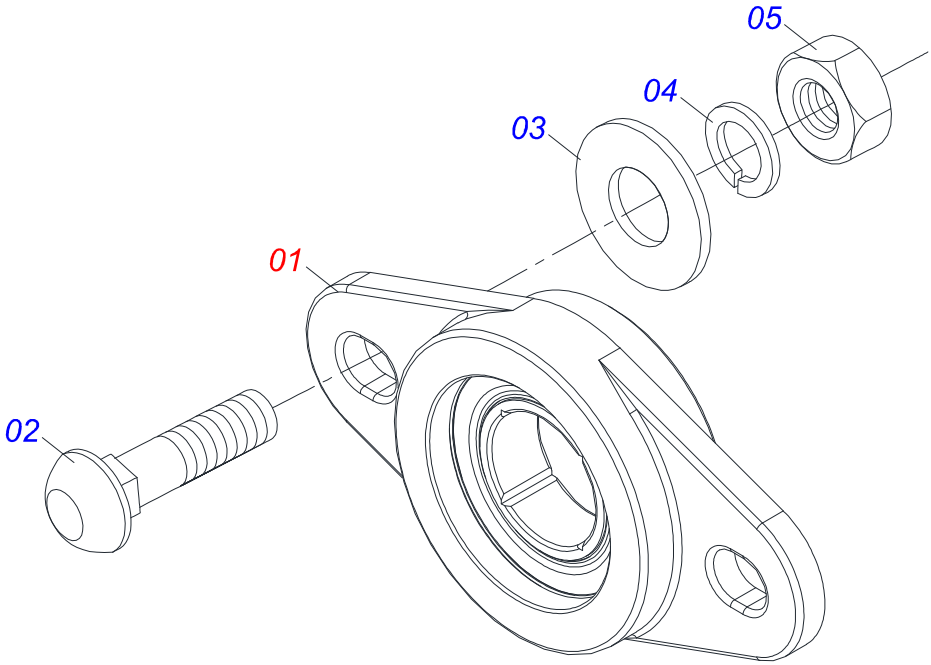

Item	Code	Description	See page	QT
01	0501056444	BEARING WITH ROLLING	143	01
02	0503011953	5/16" X 1" BOLT		02
03	0501010694	FLAT WASHER		02
04	0503010179	LOCK WASHER		02
05	0503010337	5/16" NUT		02

BEARING WITH ROLLING

0501056444

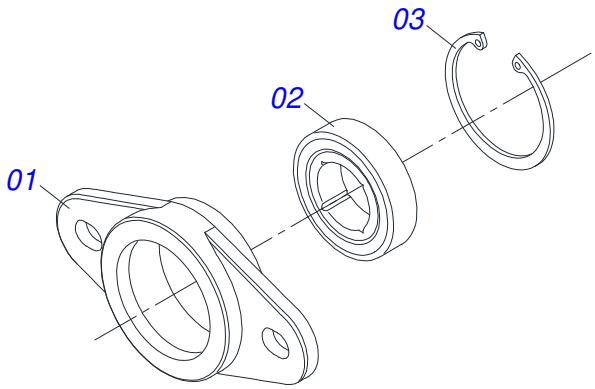

Item	Code	Description	See page	QT
01	0502011697	BEARING OF THE GEAR BOX		01
02	0503013462	BEARING WITH BALL BEARING		01
03	0503011105	SEAL RING		01

TENSIONER WITH GEAR

0511057258

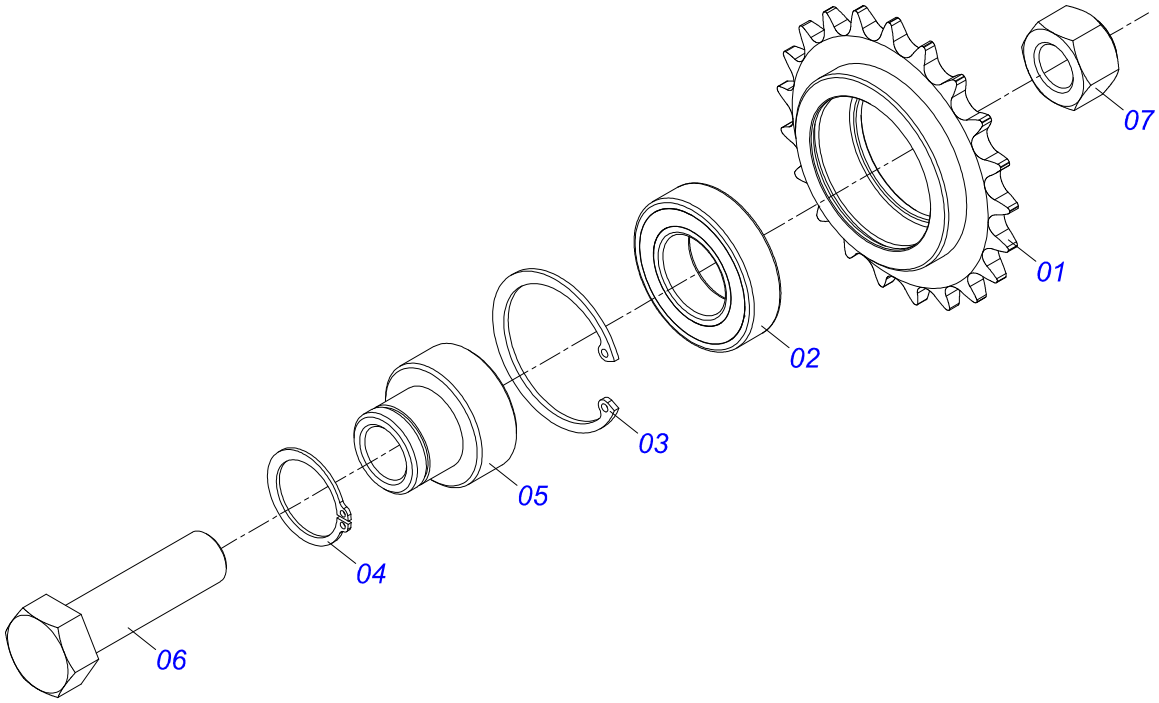

Item	Code	Description	See page	QT
01	0511062169	21Z P 1/2" GEAR		01
02	0503011410	ROLLER BEARING		01
03	0503011105	SEAL RING		01
04	0503010406	501025 CLAMPING RING (FOR AXLE)		01
05	0571019207	DEVIATION AXLE GEAR BOX		01
06	0503010899	5/8" X 2-1/4" BOLT		01
07	0503012412	5/8 UNC SELF LOCKING NUT		01

CHAIN TENSIONER

0511054363

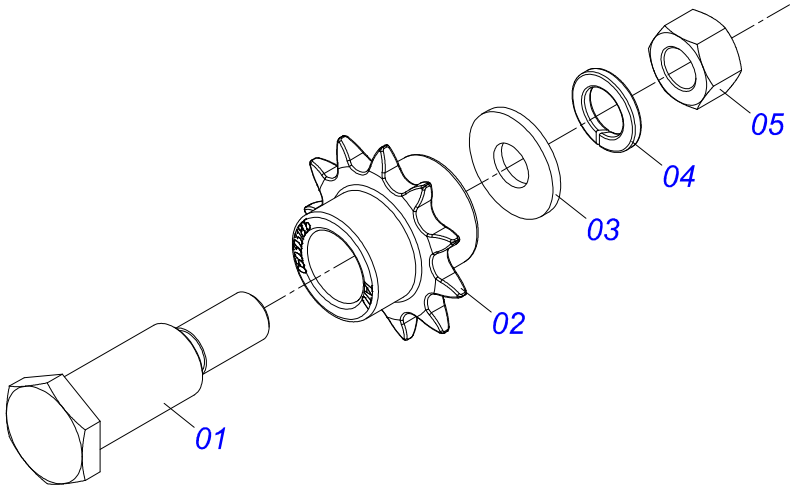

Item	Code	Description	See page	QT
01	0531019398	AXLE TENSIONER CHAIN GEAR BOX		01
02	0503031805	11Z 1/2" GEAR		01
03	0511017302	FLAT WASHER		02
04	0503010019	1/2" SPRING WASHER		01
05	0503010060	1/2" NUT		01

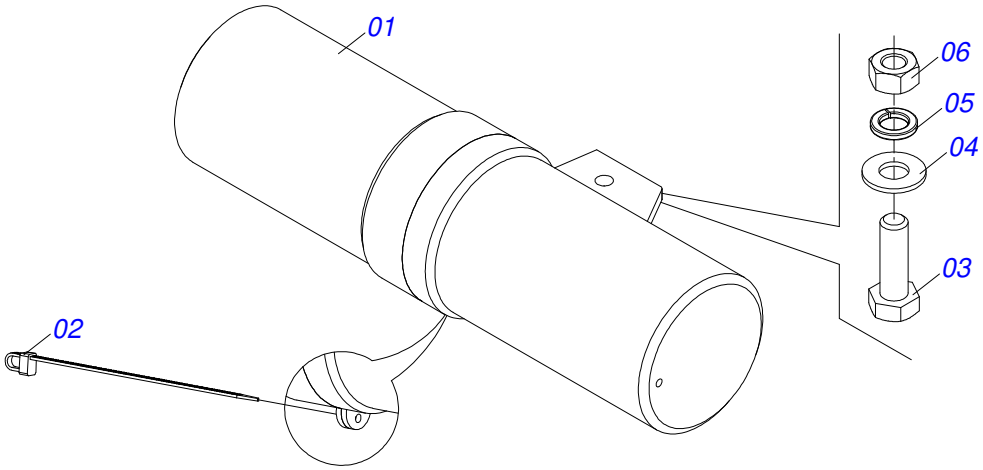

Item	Code	Description	See page	QT
01	0503060100	OPERATOR'S MANUAL STORAGE TUBE		01
02	0503010267	NYLON CLAMP		01
03	0503010363	5/16" X 1" BOLT		01
04	0501010694	FLAT WASHER		01
05	0503010179	LOCK WASHER		01
06	0503010337	5/16" NUT		01

LIFTING SUPPORT ASSEMBLY

0511059322

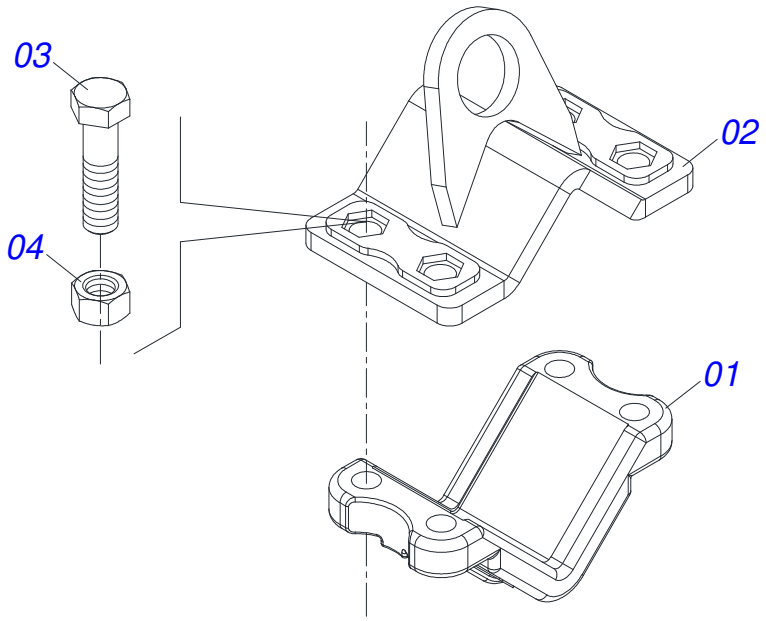

Item	Code	Description	See page	QT
01	0502012789	FIXER SUPPORT FERTILIZER ROW		01
02	0521067033	FRAME LIFTING SUPPORT		01
03	0503017960	5/8" X 3-12" BOLT		04
04	0503010811	5/8" UNF SELF ADJUSTING NUT		04

MONITORING ASSEMBLY PLANTING SEEDS 09L PM400

0521053445

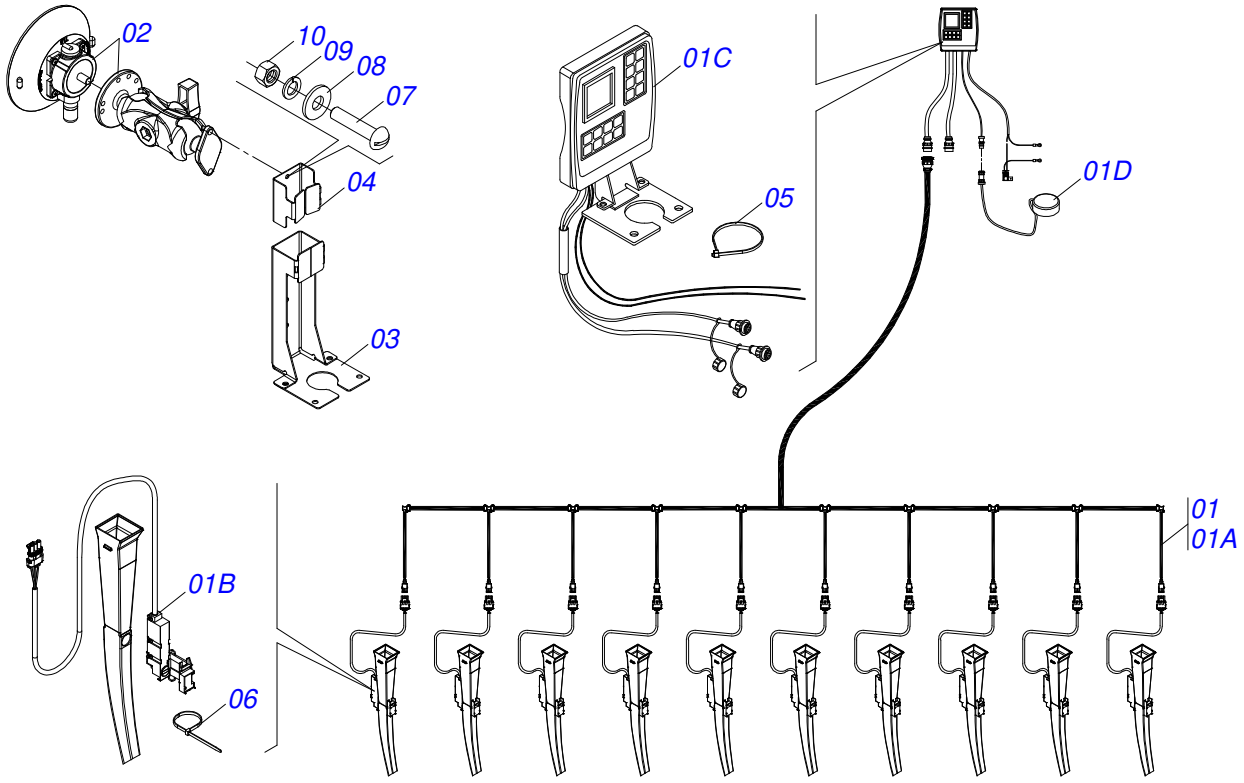

Item	Code	Description	See page	QT
01	0503062794	SEED MONITORING KIT 9L 45/50 PM400		01
01A	0503016555	9 ROW SIMPLE MONITOR CABLE		01
01B	0503019100	SENSOR		09
01C	0503017602	MONITOR PLANT PM400		01
01D	0503017443	ANTENNA GPS PM 400		01
02	0503016234	TRIMBLE FIXING WINDOW		01
03	0503016452	FIXING SUPPORT AG500 TRIMBLE		01
04	0571012196	MOUNTING BRACKET PM 400		01
05	0503013100	NYLON CLAMP		45
06	0503016033	4.8 X 1.3 X 300 MM NYLON CLAMP		**
07	0503010803	SCREW 3/16 UNC X 3/4 CAF G.2 ZN		02
08	0503010669	FLAT WASHER		02
09	0503010668	3/16" SPRING WASHER		02
10	0503010667	3/16" NUT		02

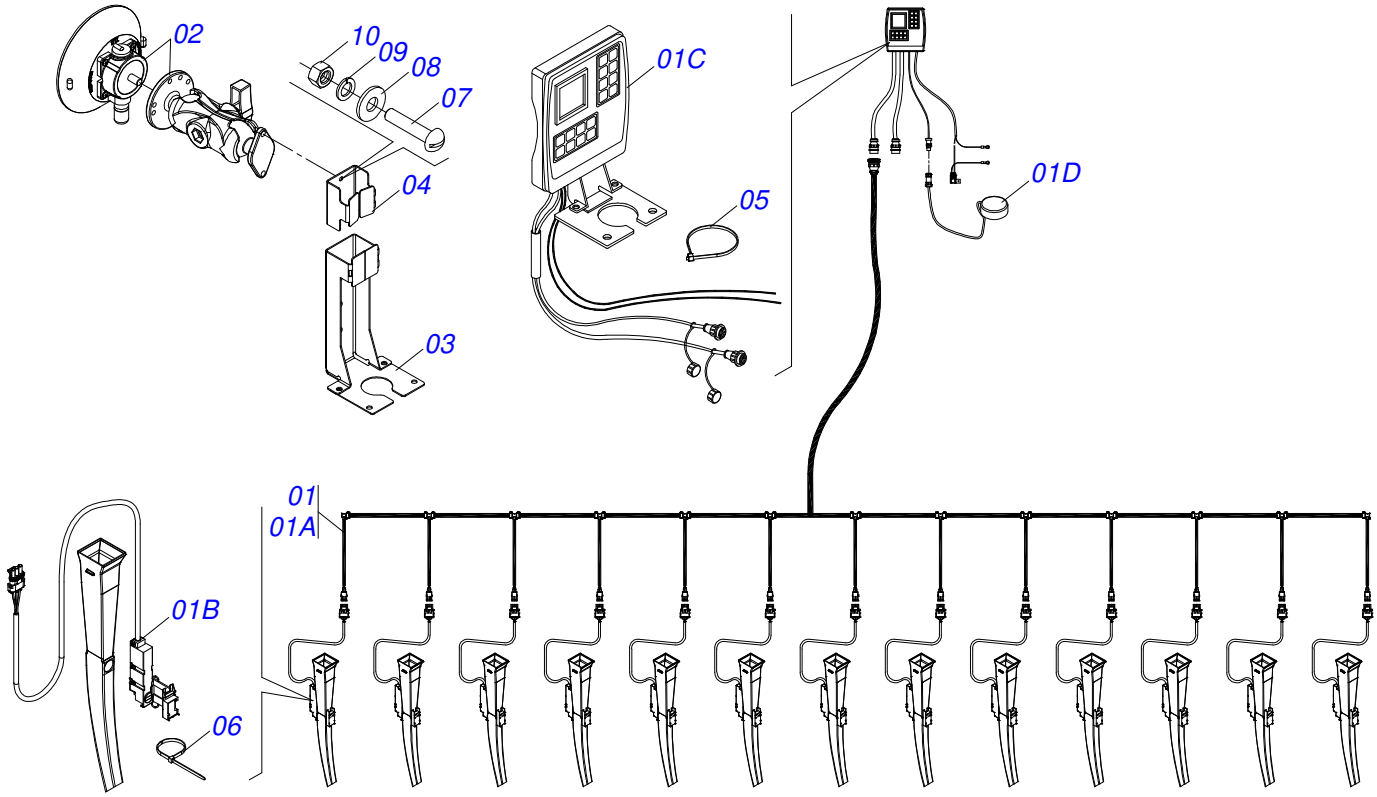

Item	Code	Description	See page	QT
01	0503062798	KIT MONITORING SEED 13L 45/50 PM400 PM413SSM		01
01A	0503016559	13 ROW SIMPLE CABLE MONITORING		01
01B	0503019100	SENSOR		13
01C	0503017602	MONITOR PLANT PM400		01
01D	0503017443	ANTENNA GPS PM 400		01
02	0503016234	TRIMBLE FIXING WINDOW		01
03	0503016452	FIXING SUPPORT AG500 TRIMBLE		01
04	0571012196	MOUNTING BRACKET PM 400		01
05	0503013100	NYLON CLAMP		65
06	0503016033	4.8 X 1.3 X 300 MM NYLON CLAMP		195
07	0503010803	SCREW 3/16 UNC X 3/4 CAF G.2 ZN		02
08	0503010669	FLAT WASHER		02
09	0503010668	3/16" SPRING WASHER		02
10	0503010667	3/16" NUT		02

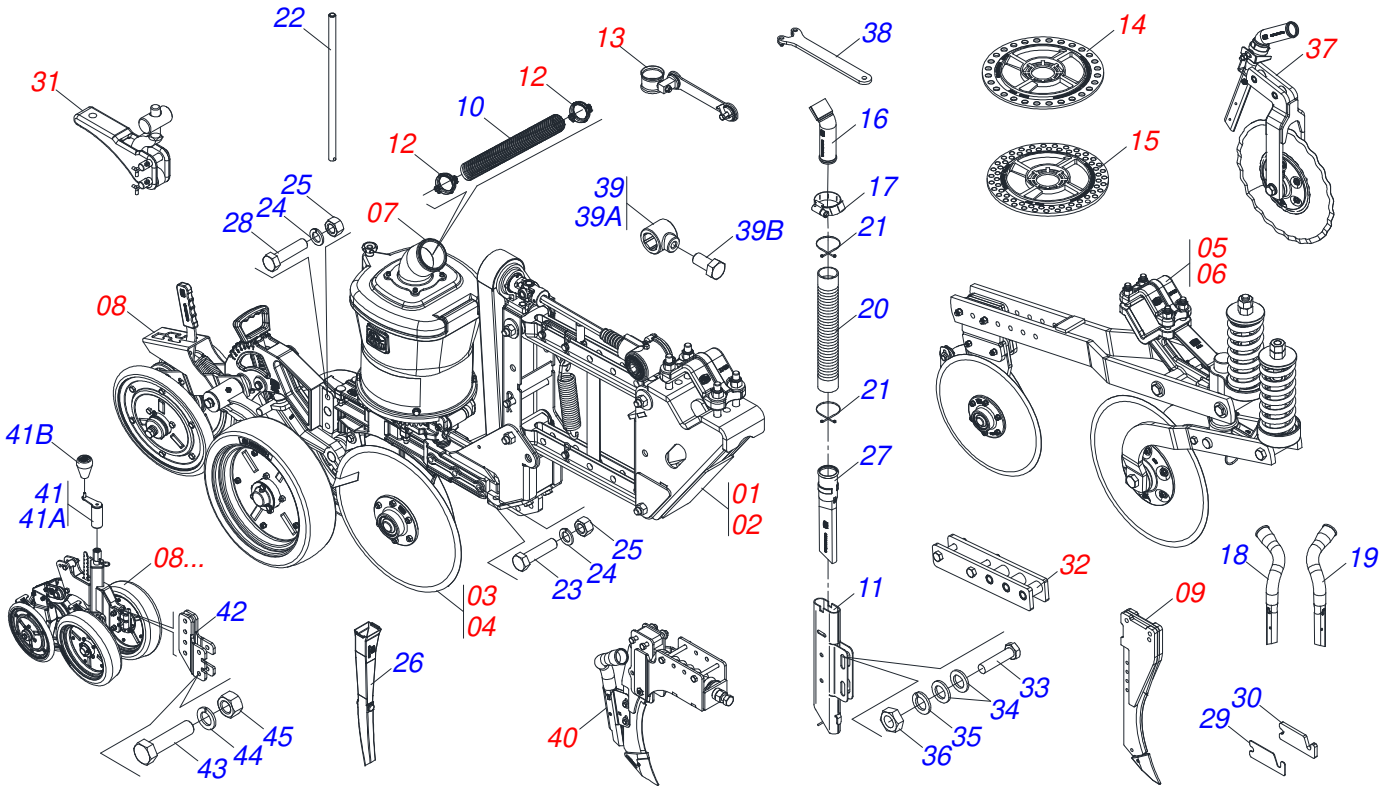

Item	Code	Description	See page	QT
01	0511057277	FRONT SHORT SEED ROW WITH RIGHT TRANSMISSION	151	01
01.	0521056500	FRONT SHORT SEED ROW WITH RIGHT TRANSMISSION WITHOUT LUBRIFICATION	152	01
02	0511057278	FRONT LONG SEED ROW WITH RIGHT TRANSMISSION	153	01
02.	0521056501	FRONT LONG SEED ROW WITH RIGHT TRANSMISSION WITHOUT LUBRIFICATION	154	01
03	0511056621	RIGHT REAR SEED ROW	160	01
03.	0521054770	RIGHT REAR SEED ROW	169	01
04	0511056622	LEFT REAR SEED ROW	161	01
04.	0521054771	LEFT REAR SEED ROW	170	01
05	0511058635	SHORT FERTILIZER ROW DDD 18" BLADE DISC	178	01
05.	0521056477	SHORT FERTILIZER ROW DC20 WITHOUT LUBRICATION	189	01
05..	0511058639	SHORT FERTILIZER ROW WITH DDD/DC20	179	01
05...	0511059051	SHORT FERTILIZER ROW	180	01
06	0511058636	LONG FERTILIZER ROW DDD 18" BLADE DISC	181	01
06.	0521056479	LONG DC20 FERTILIZER ROW WITHOUT LUBRICATION	190	01
06..	0511058640	LONG FERTILIZER ROW WITH DDD/DC20	182	01
06...	0511059052	SHORT ROW FERTILIZER	183	01
07	0521059094	SIGMA SOY SINGLE SEED SYSTEM	196	01
08	0521046122	DEPTH SYSTEM / COMPACTOR ASSY	200	01
08.	0521054984	DEPTH/COMPACTOR SYSTEM - SPT	210	01
08..	0521056317	DEPTH CONTROL WITH LEVER ANGLE REGULATOR AXIS CPERA	218	01
08...	0521044538	DEPHT WHIT REGULACION ANGLE COMPACT CONTROL	223	01
08....	0521051424	WHEEL SYSTEM DEPTH/COMPACTOR QUICK ADJUSTMENT	231	01
08.....	0521046647	DEPTH CONTROL PRESS WHEELS	236	01
08.....	0521059305	DEPTH/WIDE COMPACTOR SYSTEM	241	01

Item	Code	Description	See page	QT
09	0501110804	SCARIFIER ROD WITH POINT	244	01
09.	0501110814	SCARIFIER ROD WITH IAPAR NOZZLE	245	01
10	0571011730	SEED CONDUCTOR 3" X 1500		01
11	0521069127	BOTTOM NOZZLE FERTILIZER		01
12	0521050525	FIXER FERTILIZER CONDUCTOR	246	01
13	0531052986	PIVOT SUPPORT	247	01
14	0503063647	SIGMA CORN DISC SET	248	01
15	0503063648	SIGMA SOY DISC SET	249	01
16	0503031050	CURVED CONDUCTOR		01
17	0503010246	CLAMP		01
18	0503030391	RIGHT FERTILIZER NOZZLE		01
19	0503030392	LEFT FERTILIZER NOZZLE		01
20	0503031145	2" X 2" X 20" HOSE		01
21	0503031076	2" HOSE CLAMP		01
22	0531013600	PRESS ADJUSTMENT LEVER		01
23	0503010706	BOLT 1/2 UNC X 4.1/2 C S G.5 ZN		01
24	0503010019	1/2" SPRING WASHER		01
25	0503010060	1/2" NUT		01
26	0503033672	NOZZLE WITHOUT TITANIUM		01
27	0503030520	SEED SOCKET		01
28	0503010905	1/2" X 2-1/4" BOLT		01
29	0511017969	0.1" SPACING PLATE		01
30	0511018662	SPACING PLATE		01
31	0511052024	FAST CLOSING SET	250	01
32	0521057957	FIXED ROD EXTENSION WITH FIXATION	251	01
33	0503010751	C3/8" X 1.1/4" HEX BOLT G.5		01
34	0501010984	FLAT WASHER		01
35	0503010025	3/8" SPRING WASHER		01
36	0503010026	3/8" NUT		01
37	0521059218	18" CURVED CORRUGATED FERTILIZER DISC	252	01
38	0521068982	KEY CASH DISC CUTTING		01
39	0511054314	TRANSMISSION AXLE LOCK SLEEVE		01
39A	0502012699	TRANSMISSION BOX LOCK SLEEVE		01
39B	0503010256	3/8" X 3/4" BOLT		01
40	0521053949	SCARIFIER SPINDLE WITH SOCKET RIGHT	255	01
40.	0521053948	SCARIFIER SPINDLE WITH SOCKET LEFT	256	01
41	0511058877	REGULATORY KEY		01
41A	0521066800	BODY REGULATORY KEY		01
41B	0503030878	LEVER CRANK		01
42	0521067360	PROTRACTOR CPRA		01
43	0503010479	BOLT		01
44	0503010019	1/2" SPRING WASHER		01
45	0503010060	1/2" NUT		01

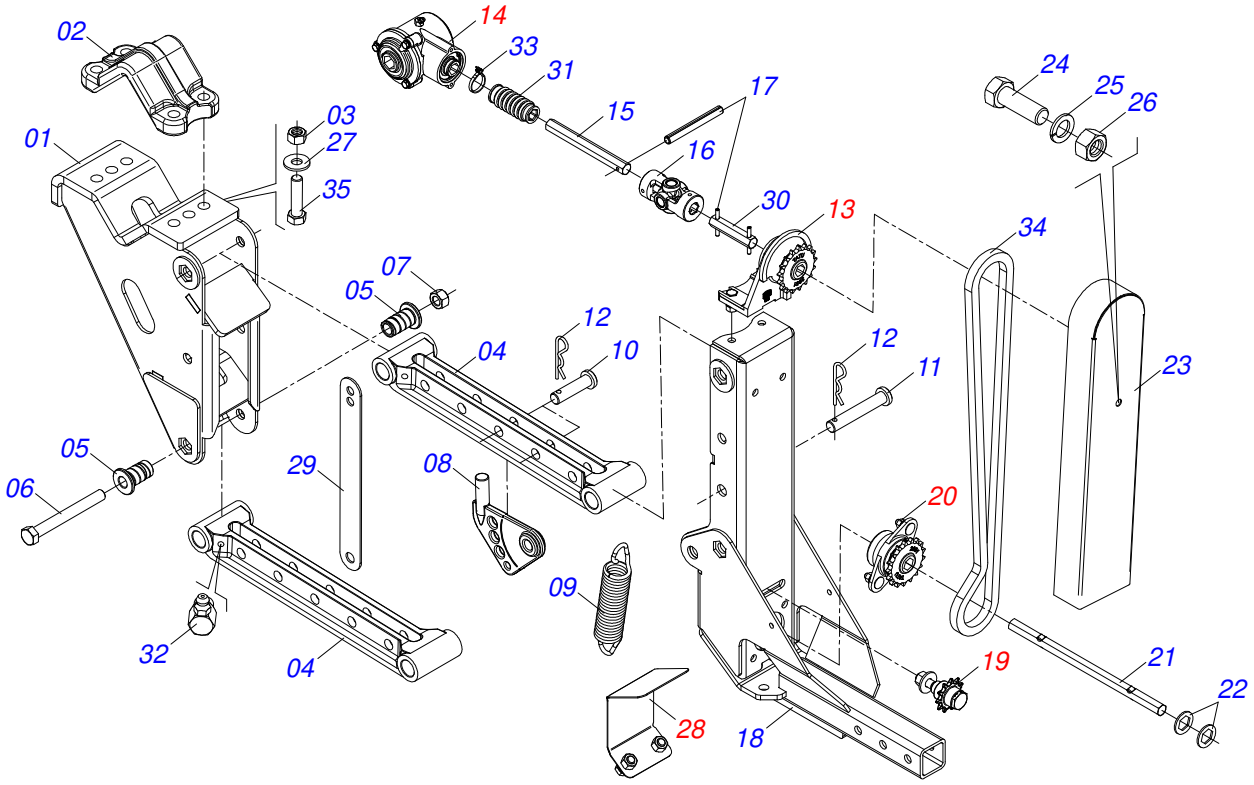

Item	Code	Description	See page	QT
01	0521065941	FRAME SEED ROW FRONT		01
02	0502012789	FIXER SUPPORT FERTILIZER ROW		01
03	0503010811	5/8" UNF SELF ADJUSTING NUT		04
04	0502012804	PIVOT ARM SEED ROW		02
05	0571018882	SEED ROW ARM SLEEVE		08
06	0503010967	SCREW 5/8 UNC X 5.1/2 CS G.5 ZN		04
07	0503012412	5/8 UNC SELF LOCKING NUT		04
08	0502012812	SEED ROW ADJUSTMENT LEVER ASSY		01
09	0503034198	SPRING TRACTION 40 X 198 X 5,5		01
10	0571018883	PIN FIXER SPRING		03
11	0571018884	LOCK PIN ROW ARTICULAT		01
12	0503030168	HITCH PIN CLIP		04
13	0511058766	BEARING	155	01
14	0511057159	TRANSMISSION BOX SEED ROW	156	01
15	0571012492	5/8 X 330 AXLE HEX		01
16	0501056296	UNIVERSAL JOINT		01
17	0503011855	0.2" X 1.8" SPRING PIN		03
18	0521065942	FRAME REAR SHORT ROW SEED		01
19	0511057269	CHAIN TENSIONER	157	01
20	0511059872	BEARING	158	01
21	0581010239	SEED ROW AXLE TRANSMISSION		01
22	0521011859	FLAT WASHER		02
23	0581011694	PROTECTION REAR COVER SEED ROW		01
24	0503010765	3/8" X 3" BOLT		01
25	0503010025	3/8" SPRING WASHER		01
26	0503010026	3/8" NUT		01
27	0501012140	FLAT WASHER		08
28	0511058512	PROTECTION COVER	159	01
29	0581011430	DRAWBAR ASSY		01
30	0581010976	5/8" HEX AXLE		01
31	0503032984	HOOD HEX AXLE ROW		01

Item	Code	Description	See page	QT
32	0503010004	1890 GREASE FITTING		04
33	0503013100	NYLON CLAMP		01
34	0503013215	40-1 CHAIN X 89 LINK + MENDING		01
35	0503017857	BOLT 5/8 UNF 4		04

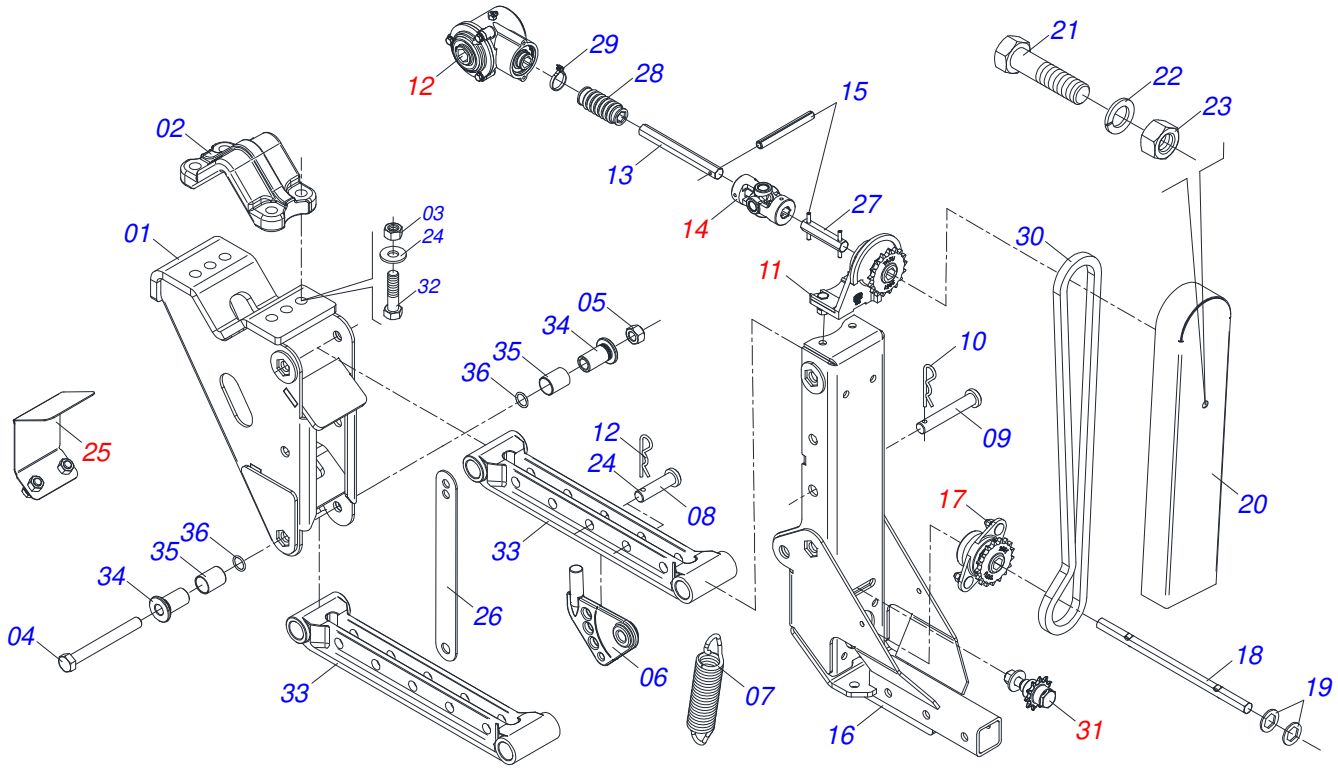

Item	Code	Description	See page	QT
001	0521065941	FRAME SEED ROW FRONT		01
002	0502012789	FIXER SUPPORT FERTILIZER ROW		01
003	0503010811	5/8" UNF SELF ADJUSTING NUT		04
004	0503010967	SCREW 5/8 UNC X 5.1/2 CS G.5 ZN		04
005	0503012412	5/8 UNC SELF LOCKING NUT		04
006	0502012812	SEED ROW ADJUSTMENT LEVER ASSY		01
007	0503034198	SPRING TRACTION 40 X 198 X 5,5		01
008	0571018883	PIN FIXER SPRING		03
009	0571018884	LOCK PIN ROW ARTICULAT		01
010	0503030168	HITCH PIN CLIP		04
011	0511058766	BEARING	155	01
012	0511057159	TRANSMISSION BOX SEED ROW	156	01
013	0571012492	5/8 X 330 AXLE HEX		01
014	0501056296	UNIVERSAL JOINT		01
015	0503011855	0.2" X 1.8" SPRING PIN		03
016	0521065942	FRAME REAR SHORT ROW SEED		01
017	0511059872	BEARING	158	01
018	0581010239	SEED ROW AXLE TRANSMISSION		01
019	0521011859	FLAT WASHER		02
020	0581011694	PROTECTION REAR COVER SEED ROW		01
021	0503010765	3/8" X 3" BOLT		01
022	0503010025	3/8" SPRING WASHER		01
023	0503010026	3/8" NUT		01
024	0501012140	FLAT WASHER		08
025	0511058512	PROTECTION COVER	159	01
026	0581011430	DRAWBAR ASSY		01
027	0581010976	5/8" HEX AXLE		01
028	0503032984	HOOD HEX AXLE ROW		01
029	0503013100	NYLON CLAMP		01
030	0503013215	40-1 CHAIN X 89 LINK + MENDING		01
031	0511057269	CHAIN TENSIONER	157	01

Item	Code	Description	See page	QT
032	0503017857	BOLT 5/8 UNF 4		04
033	0591011156	PIVOT ARM SEED ROW		02
034	0591011157	SPACER LOWER SLEEVE		08
035	0503019273	SLEEVE		08
036	0503010045	O'RING		08

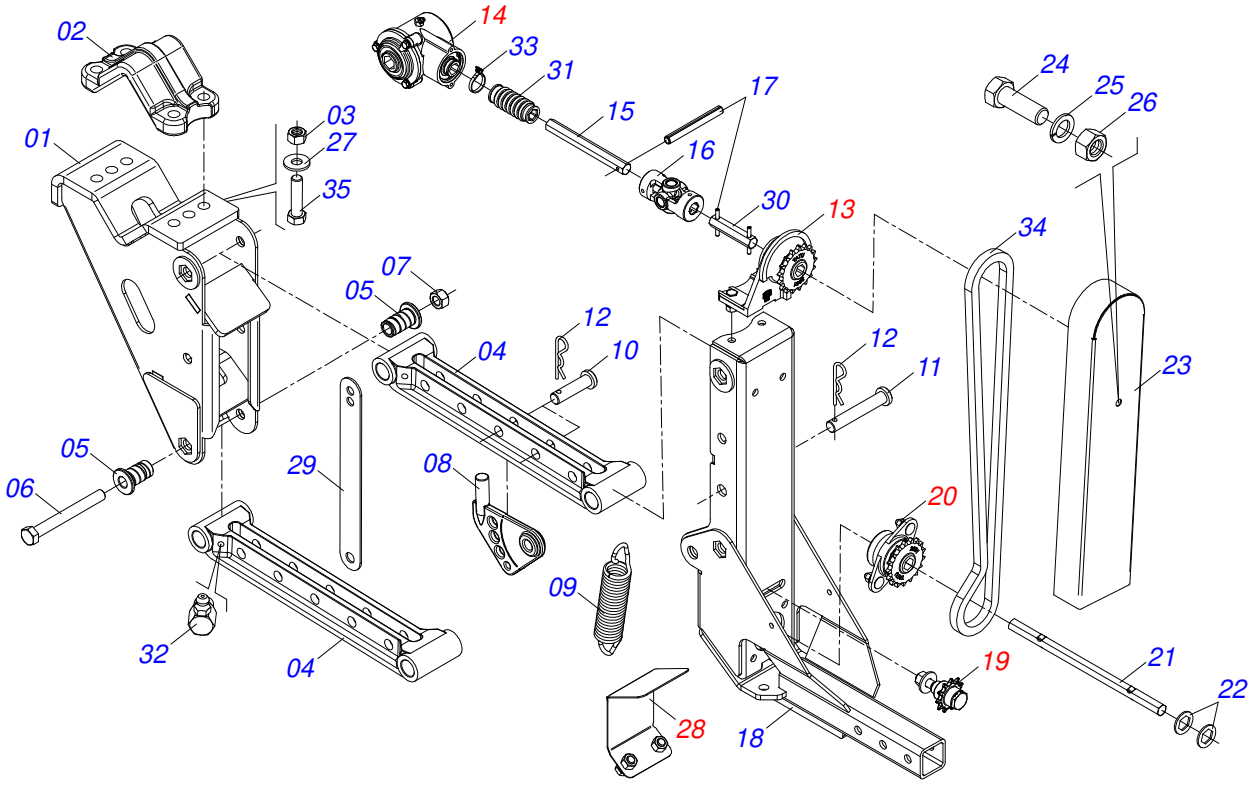

Item	Code	Description	See page	QT
01	0521065941	FRAME SEED ROW FRONT		01
02	0502012789	FIXER SUPPORT FERTILIZER ROW		01
03	0503010811	5/8" UNF SELF ADJUSTING NUT		04
04	0502012804	PIVOT ARM SEED ROW		02
05	0571018882	SEED ROW ARM SLEEVE		08
06	0503010967	SCREW 5/8 UNC X 5.1/2 CS G.5 ZN		04
07	0503012412	5/8 UNC SELF LOCKING NUT		04
08	0502012812	SEED ROW ADJUSTMENT LEVER ASSY		01
09	0503034198	SPRING TRACTION 40 X 198 X 5,5		01
10	0571018883	PIN FIXER SPRING		03
11	0571018884	LOCK PIN ROW ARTICULAT		01
12	0503030168	HITCH PIN CLIP		04
13	0511058766	BEARING	155	01
14	0511057159	TRANSMISSION BOX SEED ROW	156	01
15	0571012492	5/8 X 330 AXLE HEX		01
16	0501056296	UNIVERSAL JOINT		01
17	0503011855	0.2" X 1.8" SPRING PIN		03
18	0521065943	REAR FRAME LONG ROW SEED		01
19	0511057269	CHAIN TENSIONER	157	01
20	0511059872	BEARING	158	01
21	0581010240	SEED ROW AXLE TRANSMISSION		01
22	0521011859	FLAT WASHER		02
23	0581011694	PROTECTION REAR COVER SEED ROW		01
24	0503010765	3/8" X 3" BOLT		01
25	0503010025	3/8" SPRING WASHER		01
26	0503010026	3/8" NUT		01
27	0501012140	FLAT WASHER		08
28	0511058512	PROTECTION COVER	159	01
29	0581011430	DRAWBAR ASSY		01
30	0581010976	5/8" HEX AXLE		01
31	0503032984	HOOD HEX AXLE ROW		01

Item	Code	Description	See page	QT
32	0503010004	1890 GREASE FITTING		04
33	0503013100	NYLON CLAMP		01
34	0503013215	40-1 CHAIN X 89 LINK + MENDING		01
35	0503017857	BOLT 5/8 UNF 4		04

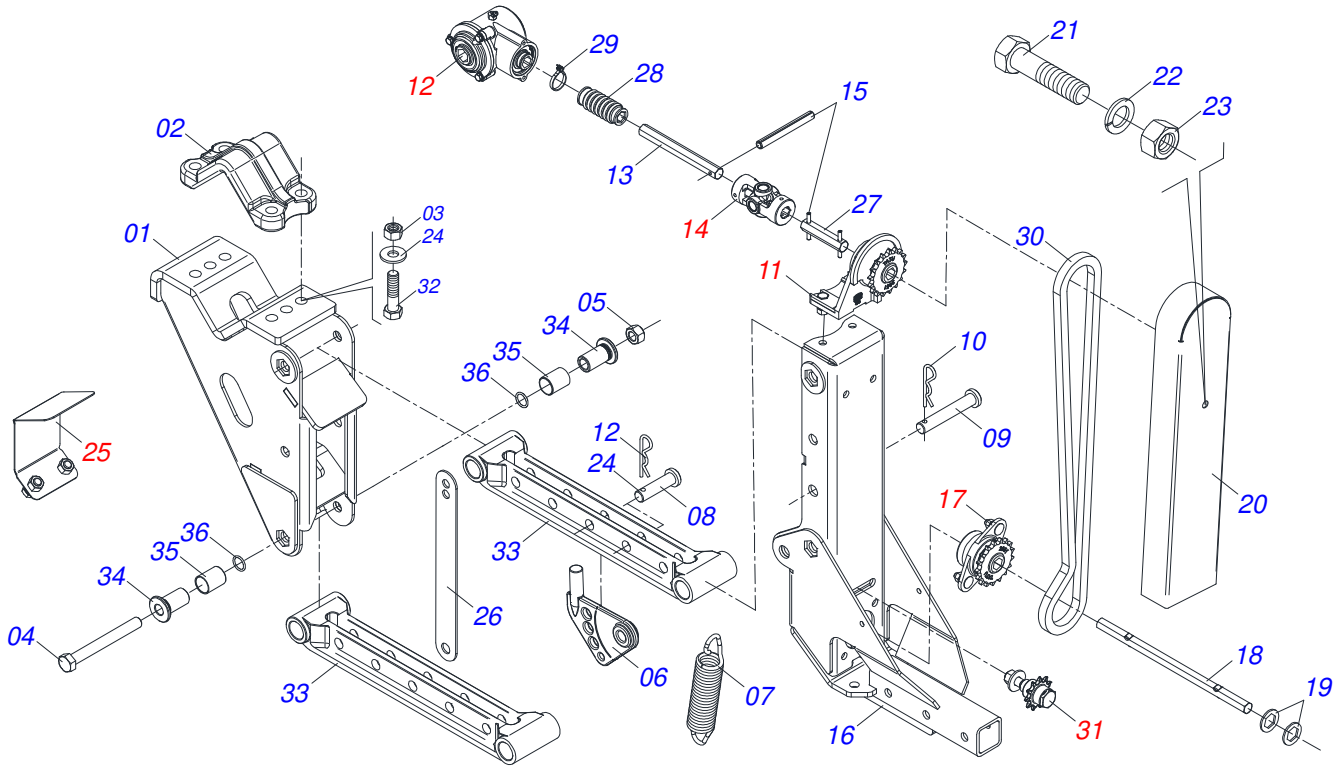

Item	Code	Description	See page	QT
001	0521065941	FRAME SEED ROW FRONT		01
002	0502012789	FIXER SUPPORT FERTILIZER ROW		01
003	0503010811	5/8" UNF SELF ADJUSTING NUT		04
004	0503010967	SCREW 5/8 UNC X 5.1/2 CS G.5 ZN		04
005	0503012412	5/8 UNC SELF LOCKING NUT		04
006	0502012812	SEED ROW ADJUSTMENT LEVER ASSY		01
007	0503034198	SPRING TRACTION 40 X 198 X 5,5		01
008	0571018883	PIN FIXER SPRING		03
009	0571018884	LOCK PIN ROW ARTICULAT		01
010	0503030168	HITCH PIN CLIP		04
011	0511058766	BEARING	155	01
012	0511057159	TRANSMISSION BOX SEED ROW	156	01
013	0571012492	5/8 X 330 AXLE HEX		01
014	0501056296	UNIVERSAL JOINT		01
015	0503011855	0.2" X 1.8" SPRING PIN		03
016	0521065943	REAR FRAME LONG ROW SEED		01
017	0511059872	BEARING	158	01
018	0581010240	SEED ROW AXLE TRANSMISSION		01
019	0521011859	FLAT WASHER		02
020	0581011694	PROTECTION REAR COVER SEED ROW		01
021	0503010765	3/8" X 3" BOLT		01
022	0503010025	3/8" SPRING WASHER		01
023	0503010026	3/8" NUT		01
024	0501012140	FLAT WASHER		08
025	0511058512	PROTECTION COVER	159	01
026	0581011430	DRAWBAR ASSY		01
027	0581010976	5/8" HEX AXLE		01
028	0503032984	HOOD HEX AXLE ROW		01
029	0503013100	NYLON CLAMP		01
030	0503013215	40-1 CHAIN X 89 LINK + MENDING		01
031	0511057269	CHAIN TENSIONER	157	01

Item	Code	Description	See page	QT
032	0503017857	BOLT 5/8 UNF 4		04
033	0591011156	PIVOT ARM SEED ROW		02
034	0591011157	SPACER LOWER SLEEVE		08
035	0503019273	SLEEVE		08
036	0503010045	O'RING		08

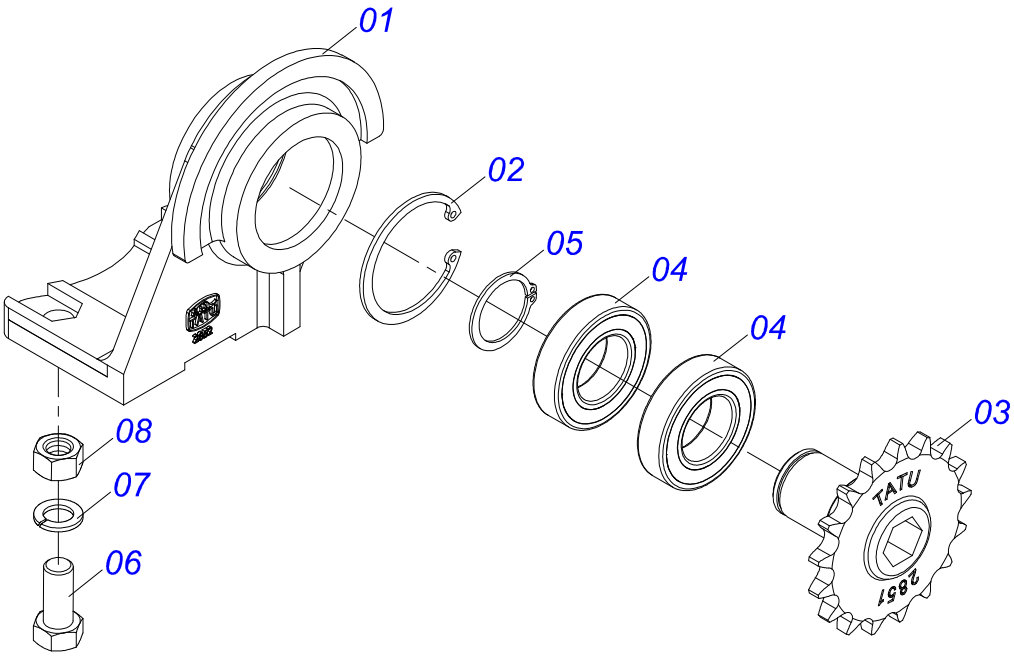

Item	Code	Description	See page	QT
01	0502012852	ROW SEED UPPER BEARING		01
02	0503011105	SEAL RING		01
03	0502012851	17Z GEAR WITH HEX HOLE		01
04	0503011410	ROLLER BEARING		02
05	0503010406	501025 CLAMPING RING (FOR AXLE)		01
06	0503010237	3/8" X 1" BOLT		02
07	0503010025	3/8" SPRING WASHER		02
08	0503010026	3/8" NUT		02

TRANSMISSION BOX SEED ROW

0511057159

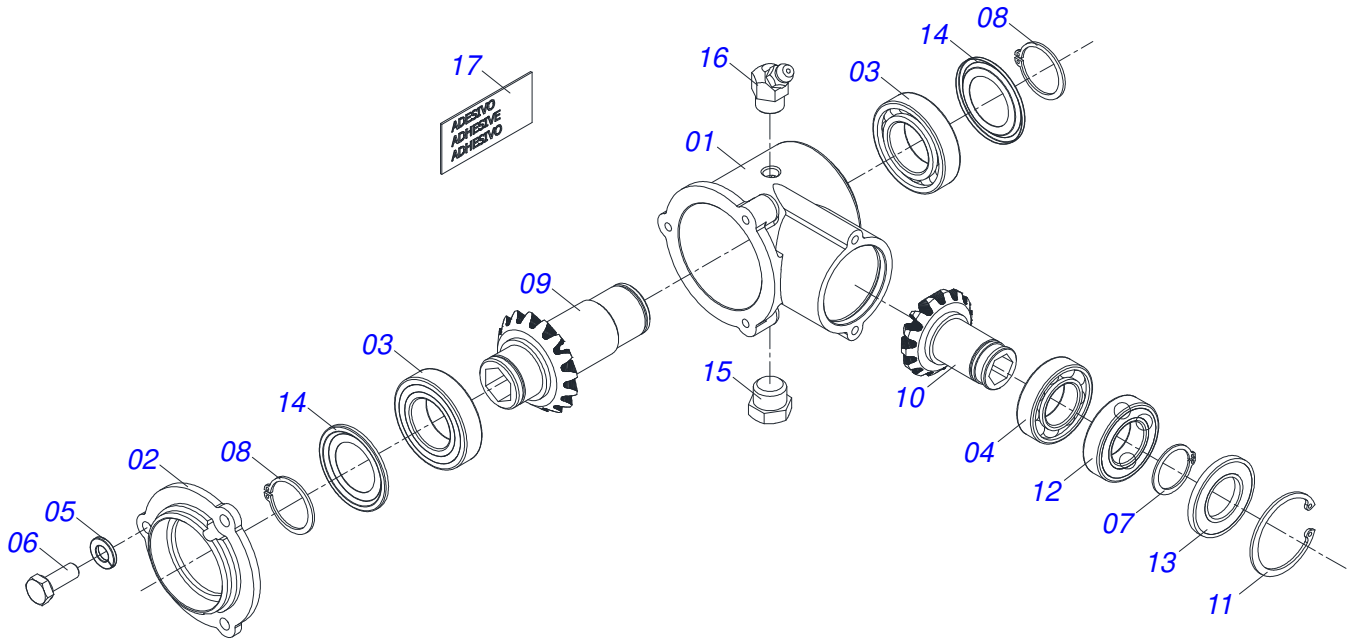

Item	Code	Description	See page	QT
01	0502012465	TRANSMISSION HUB		01
02	0502012464	BOX TRANSMISSION COVER		01
03	0503016995	6006 BALL BEARING		02
04	0503015895	6005 Z BALL BEARING		01
05	0503010143	1/4" SPRING WASHER		03
06	0503011378	M6X1X16 C S 8.8 ZN BOLT		03
07	0503010406	501025 CLAMPING RING (FOR AXLE)		01
08	0503010707	501030 CLAMPING RING (FOR AXLE)		02
09	0502040856	CONICAL GEAR		01
10	0571018870	14Z CONICAL GEAR		01
11	0503011105	SEAL RING		01
12	0503011409	6005 Z BALL BEARING		01
13	0503017008	SEAL RING		01
14	0503017007	SEAL RING		02
15	0511017907	1/8" BSPT X 6 PLUG		01
16	0503010003	1845 GREASE FITTING		01
17	0503035316	LUBRICATED POINTS ADHESIVE LABEL		01

CHAIN TENSIONER

0511057269

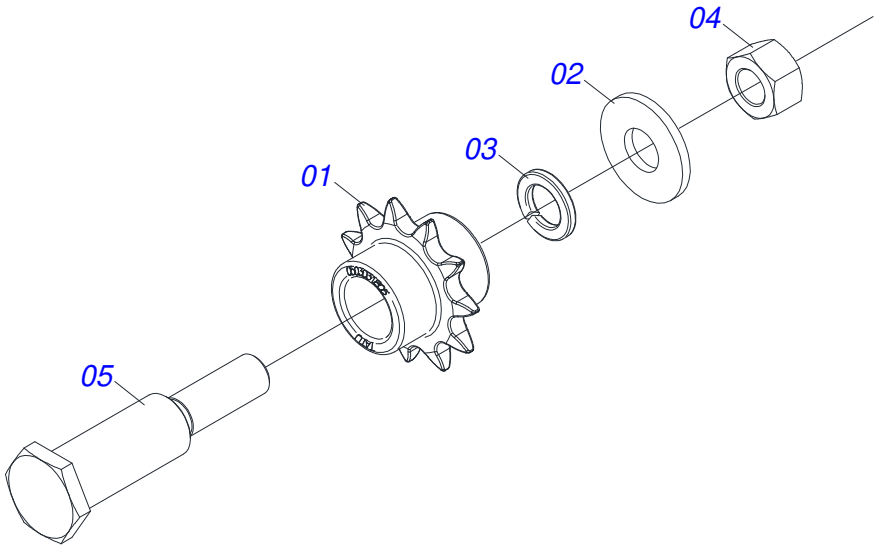

Item	Code	Description	See page	QT
01	0503031805	11Z 1/2" GEAR		01
02	0511017302	FLAT WASHER		01
03	0503010019	1/2" SPRING WASHER		01
04	0503010060	1/2" NUT		01
05	0531019479	AXLE CHAIN GEAR		01

BEARING

0511059872

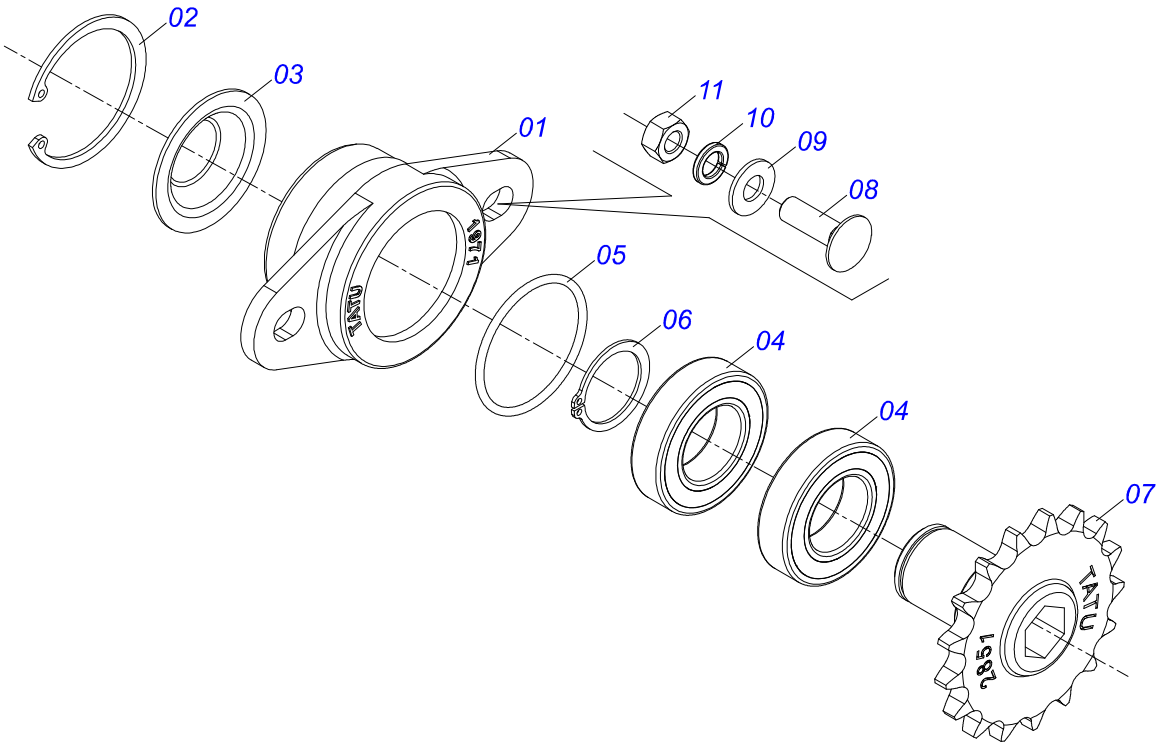

Item	Code	Description	See page	QT
01	0581012948	HOUSING BEARING		01
02	0503011105	SEAL RING		01
03	0581012949	BEARING COVER		01
04	0503011410	ROLLER BEARING		02
05	0503018045	2-130 (AGEL) O'RING		01
06	0503010406	501025 CLAMPING RING (FOR AXLE)		01
07	0502012851	17Z GEAR WITH HEX HOLE		01
08	0503011953	5/16" X 1" BOLT		02
09	0501010694	FLAT WASHER		02
10	0503010179	LOCK WASHER		02
11	0503010337	5/16" NUT		02

PROTECTION COVER

0511058512

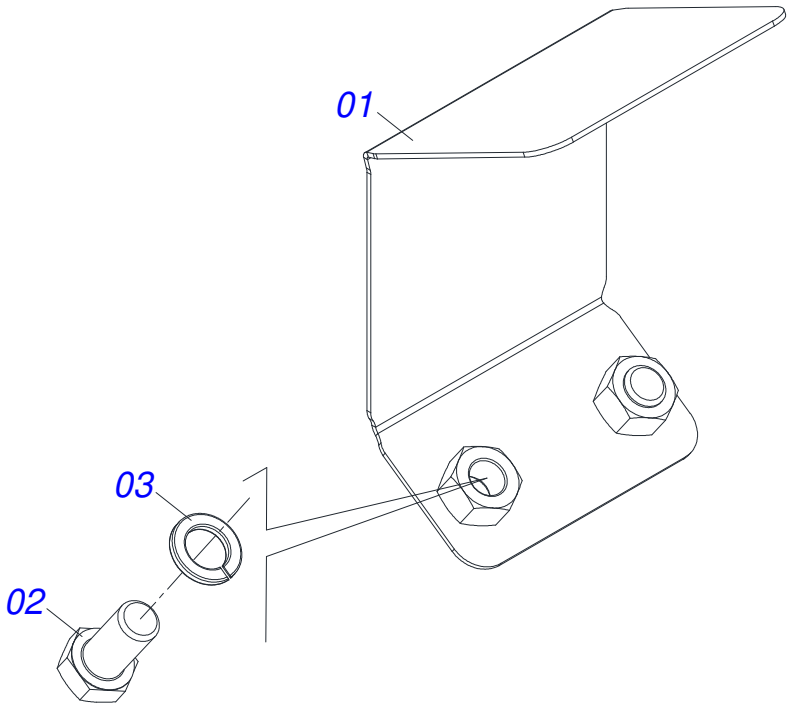

Item	Code	Description	See page	QT
01	0521066693	CAP BEARING		01
02	0503010834	1/2 X 1 BOLT		02
03	0503010019	1/2" SPRING WASHER		02

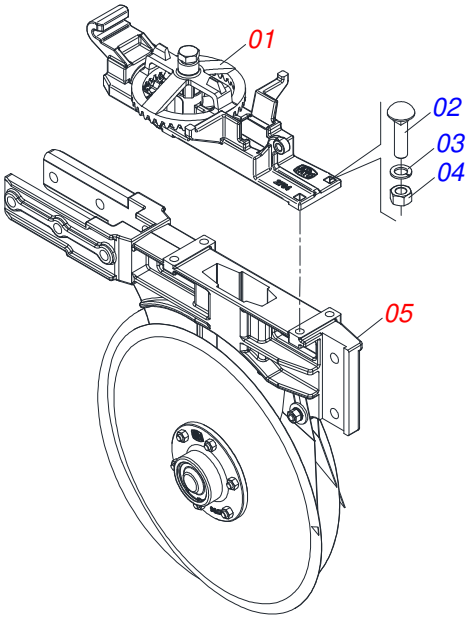

Item	Code	Description	See page	QT
01	0511051888	FIXING BASE SYSTEM SYSTEM TITANIUM ASSY 5/8	162	01
02	0503015920	3/8" UNC X 1.3/4" BOLT		04
03	0503011443	3/8" SPRING WASHER		04
04	0503010026	3/8" NUT		04
05	0511056585	RIGHT 15" X 15" DOUBLE DISC SEED	163	01

LEFT REAR SEED ROW

0511056622

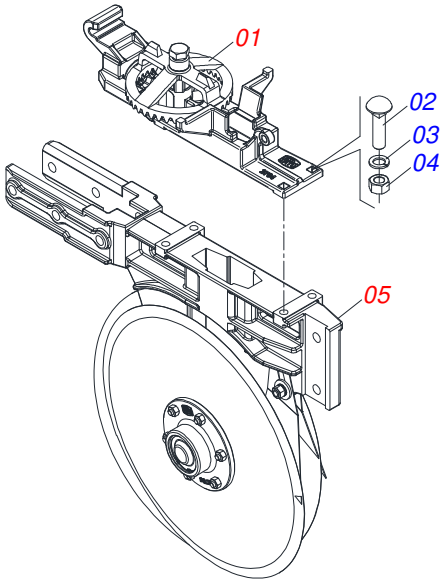

Item	Code	Description	See page	QT
01	0511051888	FIXING BASE SYSTEM SYSTEM TITANIUM ASSY 5/8	162	01
02	0503015920	3/8" UNC X 1.3/4" BOLT		04
03	0503011443	3/8" SPRING WASHER		04
04	0503010026	3/8" NUT		04
05	0511056586	15 X 15 SEED DDD LEFT	164	01

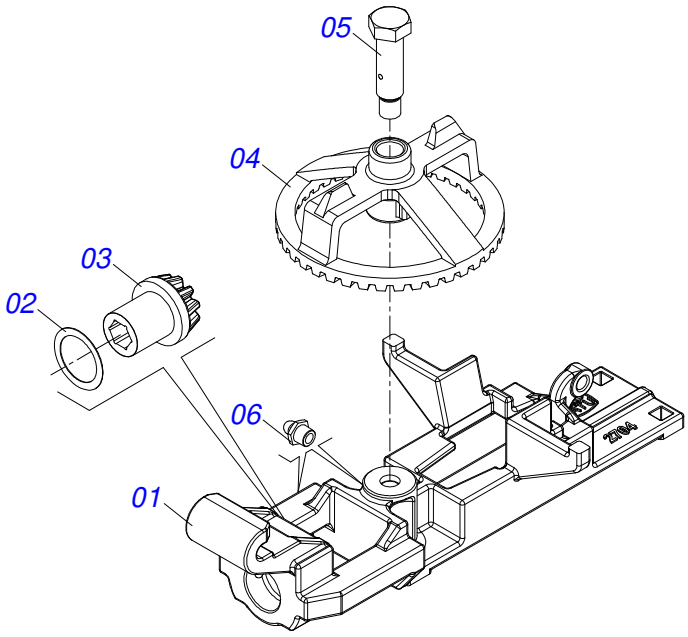

Item	Code	Description	See page	QT
01	0502012704	BASE FIXING SYSTEM		01
02	0501013354	FLAT WASHER		01
03	0502012639	12Z LOWER CONICAL GEAR		01
04	0502011418	40Z CONICAL GEAR		01
05	0511018700	AXLE		01
06	0503010002	1800 GREASE FITTING		02

RIGHT 15" X 15" DOUBLE DISC SEED

0511056585

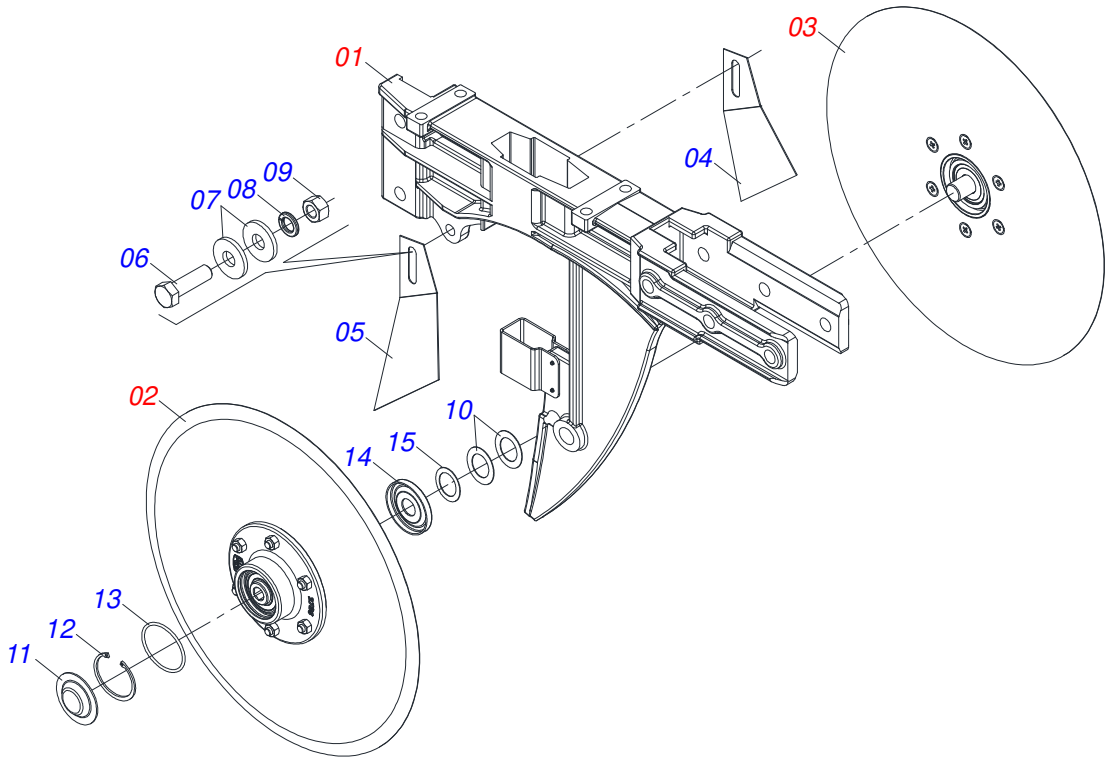

Item	Code	Description	See page	QT
01	0511052301	SUPPORT DDD 15 RIGHT	165	01
02	0511053173	CUBE LOW RIGHT WITH DISC 15	167	01
03	0511053172	LEFT LOW CUBE WITH DISC 15	168	01
04	0561010264	RH DOUBLE DISC SCRAPER - STARTING 04/18		01
05	0561010265	LH DOUBLE DISC SCRAPER - STARTING 04/18		01
06	0503010751	C3/8" X 1.1/4" HEX BOLT G.5		01
07	0501010984	FLAT WASHER		02
08	0503010025	3/8" SPRING WASHER		01
09	0503010026	3/8" NUT		01
10	0511815098	FLAT WASHER		04
11	0571011152	DOUBLE DISC CAP		02
12	0503015081	502052 CLAMPING RING (FOR AXLE)		02
13	0503014679	2-134 O'RING		02
14	0511011927	DUST CLOAK		02
15	0591014250	19 X 26 X 0,50 FLAT WASHER		02

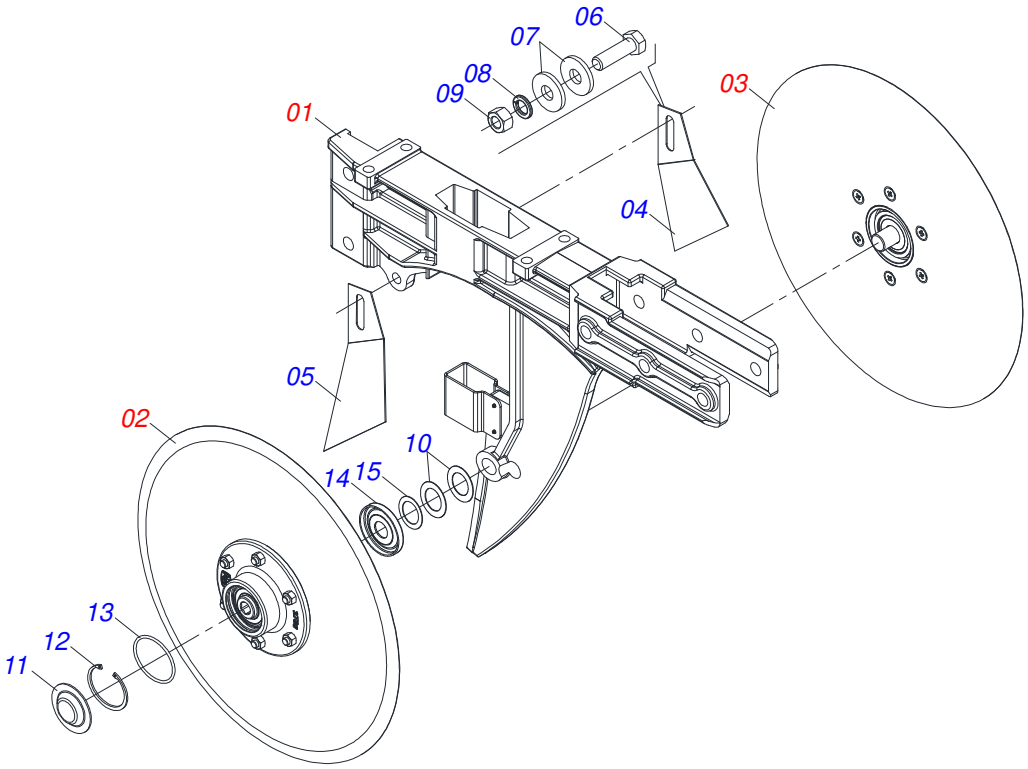

Item	Code	Description	See page	QT
01	0511052302	LH SUPPORT DDD GUIDE	166	01
02	0511053173	CUBE LOW RIGHT WITH DISC 15	167	01
03	0511053172	LEFT LOW CUBE WITH DISC 15	168	01
04	0561010264	RH DOUBLE DISC SCRAPER - STARTING 04/18		01
05	0561010265	LH DOUBLE DISC SCRAPER - STARTING 04/18		01
06	0503010751	C3/8" X 1.1/4" HEX BOLT G.5		01
07	0501010984	FLAT WASHER		02
08	0503010025	3/8" SPRING WASHER		01
09	0503010026	3/8" NUT		01
10	0511815098	FLAT WASHER		04
11	0571011152	DOUBLE DISC CAP		02
12	0503015081	502052 CLAMPING RING (FOR AXLE)		02
13	0503014679	2-134 O'RING		02
14	0511011927	DUST CLOAK		02
15	0591014250	19 X 26 X 0,50 FLAT WASHER		02

SUPPORT DDD 15 RIGHT

0511052301

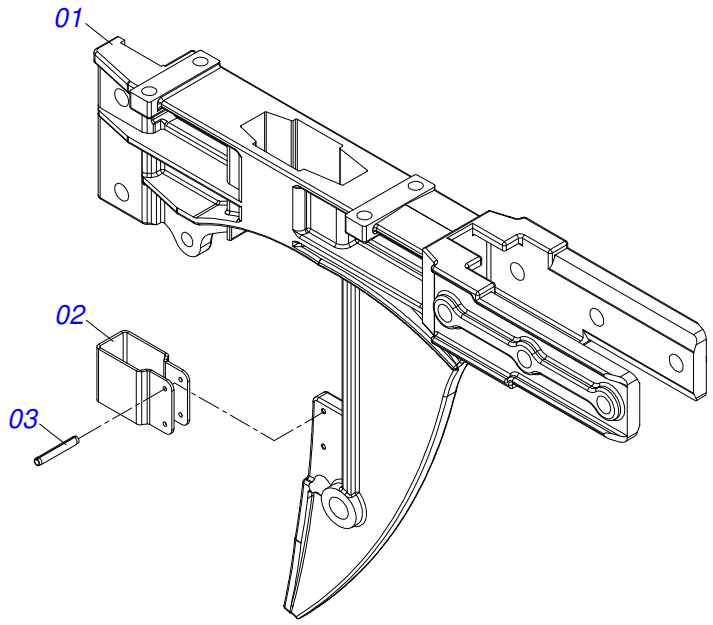

Item	Code	Description	See page	QT
01	0561015591	15"X15" RIGHT DOUBLE DISC SUPPORT		01
02	0571012491	SOCKET SEED GUIDE		01
03	0503010838	0.1" X 0.8" SPRING PIN		02

LH SUPPORT DDD GUIDE

0511052302

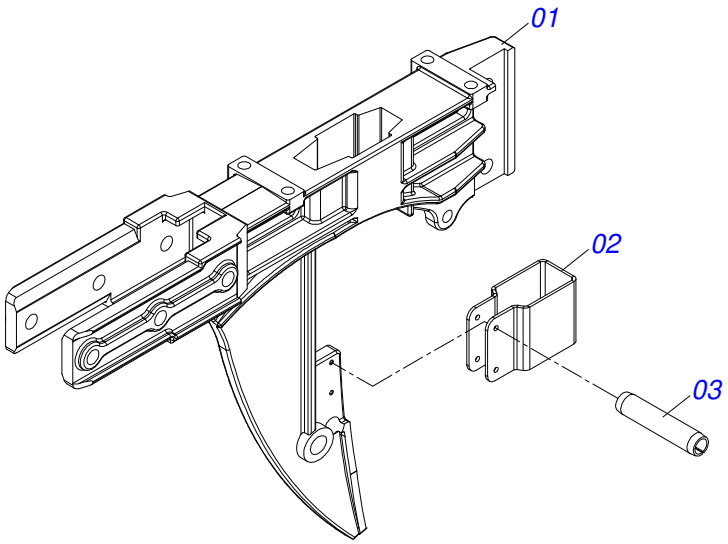

Item	Code	Description	See page	QT
01	0561015592	LEFT DOUBLE DISC SUPPORT		01
02	0571012491	SOCKET SEED GUIDE		01
03	0503010838	0.1" X 0.8" SPRING PIN		02

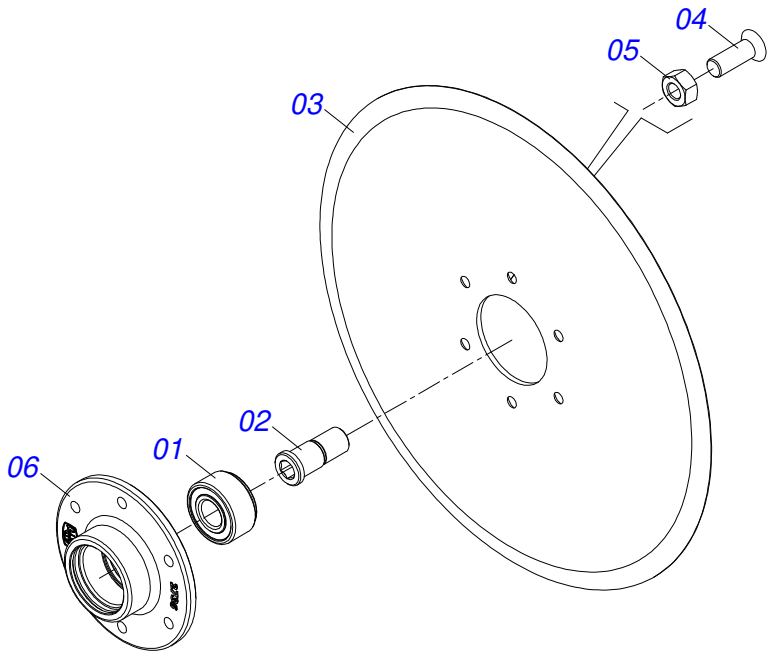

Item	Code	Description	See page	QT
01	0503063161	BEARING 5204 WITH SEALING RING		01
02	0571011150	RIGHT DOUB DISC - HUB		01
03	0603022042	13" X 0.12" PLAIN COULTER BLADE		01
04	0503010546	5/16" X 7/8" BOLT		06
05	0503010337	5/16" NUT		06
06	0502012736	HUB LOWER		01

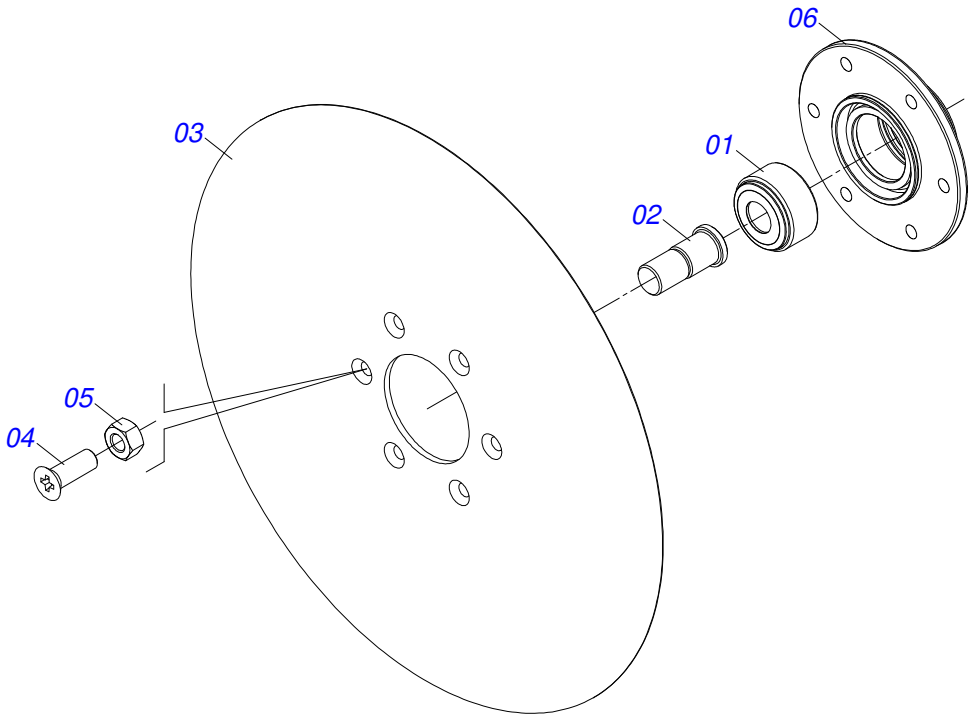

Item	Code	Description	See page	QT
01	0503063161	BEARING 5204 WITH SEALING RING		01
02	0571011151	LEFT DOUBLE DISC HUB		01
03	0603022042	13" X 0.12" PLAIN COULTER BLADE		01
04	0503010546	5/16" X 7/8" BOLT		06
05	0503010337	5/16" NUT		06
06	0502012736	HUB LOWER		01

RIGHT REAR SEED ROW

0521054770

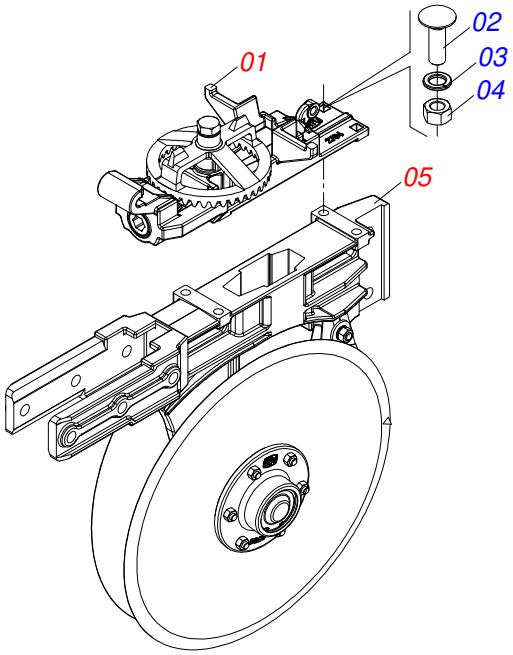

Item	Code	Description	See page	QT
01	0521054818	BASE 5/8 FIXATION WITHOUT ASSY LUBRICATION	171	01
02	0503015920	3/8" UNC X 1.3/4" BOLT		04
03	0503010025	3/8" SPRING WASHER		04
04	0503010026	3/8" NUT		04
05	0521055870	RIGHT DOUBLE DISC SEED 15 X 15	172	01

LEFT REAR SEED ROW

0521054771

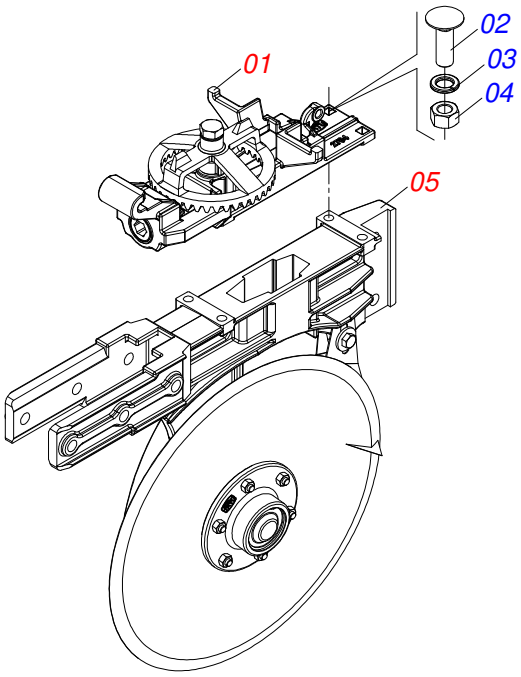

Item	Code	Description	See page	QT
01	0521054818	BASE 5/8 FIXATION WITHOUT ASSY LUBRICATION	171	01
02	0503015920	3/8" UNC X 1.3/4" BOLT		04
03	0503010025	3/8" SPRING WASHER		04
04	0503010026	3/8" NUT		04
05	0521055871	LEFT DOUBLE DISC SEED 15 X 15	173	01

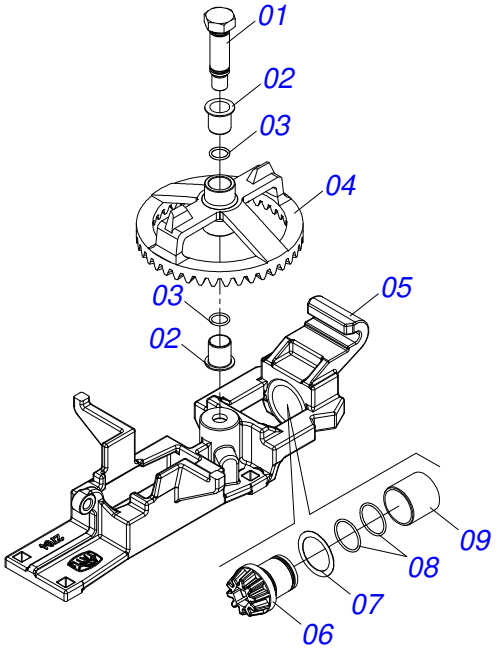

Item	Code	Description	See page	QT
01	0581019201	CROWN SHAFT		01
02	0503019340	LUBRICANT SLEEVE		02
03	0503011030	2-014 N 3006-9B O'RING		02
04	0581019200	CONICA 40Z GEAR		01
05	0581019199	FIXED BASE		01
06	0581019202	PINHAO CONICO 10Z X 5/8		01
07	0501013354	FLAT WASHER		01
08	0503010410	RING		02
09	0503019341	LUBRICANT SLEEVE		01

RIGHT DOUBLE DISC SEED 15 X 15

0521055870

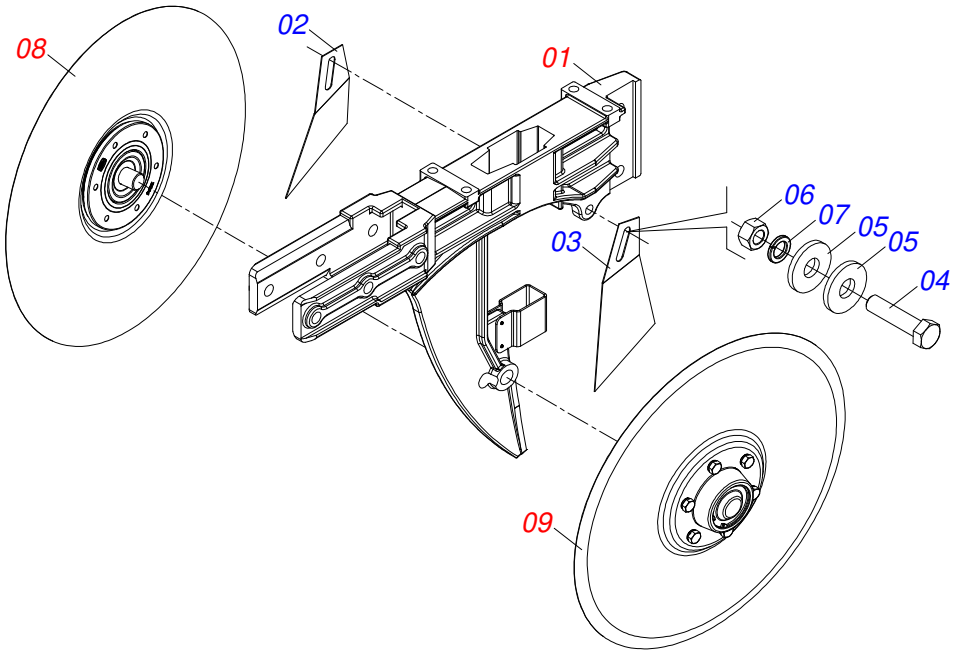

Item	Code	Description	See page	QT
01	0511052301	SUPPORT DDD 15 RIGHT	165	01
02	0561010264	RH DOUBLE DISC SCRAPER - STARTING 04/18		01
03	0561010265	LH DOUBLE DISC SCRAPER - STARTING 04/18		01
04	0503010751	C3/8" X 1.1/4" HEX BOLT G.5		01
05	0501010984	FLAT WASHER		02
06	0503010026	3/8" NUT		01
07	0503010025	3/8" SPRING WASHER		01
08	0521055866	HUB RIGHT QUICK-CHANGE DPL 15 X 4.00 FERTILIZER / SEED	174	01
09	0521055867	HUB LEFT QUICK-CHANGE DPL 15 X 4.00 FERTILIZER / SEED	175	01

LEFT DOUBLE DISC SEED 15 X 15

0521055871

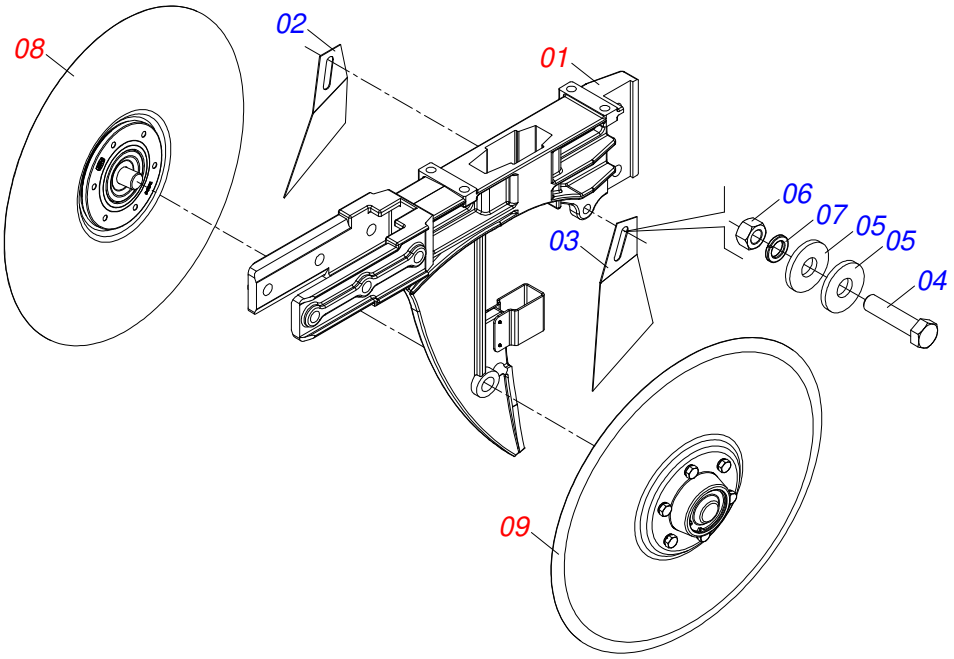

Item	Code	Description	See page	QT
01	0511052302	LH SUPPORT DDD GUIDE	166	01
02	0561010264	RH DOUBLE DISC SCRAPER - STARTING 04/18		01
03	0561010265	LH DOUBLE DISC SCRAPER - STARTING 04/18		01
04	0503010751	C3/8" X 1.1/4" HEX BOLT G.5		01
05	0501010984	FLAT WASHER		02
06	0503010026	3/8" NUT		01
07	0503010025	3/8" SPRING WASHER		01
08	0521055866	HUB RIGHT QUICK-CHANGE DPL 15 X 4.00 FERTILIZER / SEED	174	01
09	0521055867	HUB LEFT QUICK-CHANGE DPL 15 X 4.00 FERTILIZER / SEED	175	01

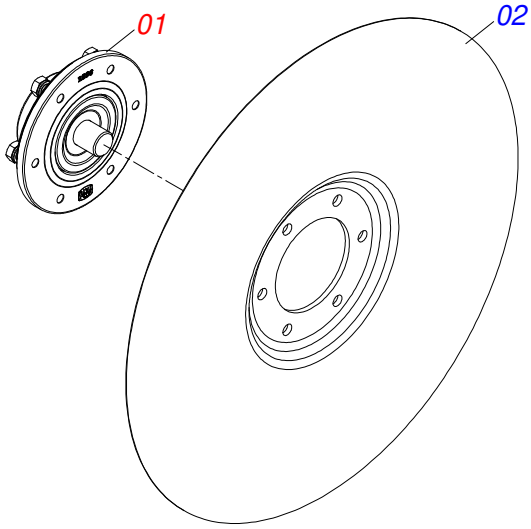

Item	Code	Description	See page	QT
01	0521055864	ASSY RIGHT HUB DDD FERTILIZER / SEED	176	01
02	0612023500	DPL CPR 15X4 C123 AFSFR72,00+6FR D568		01

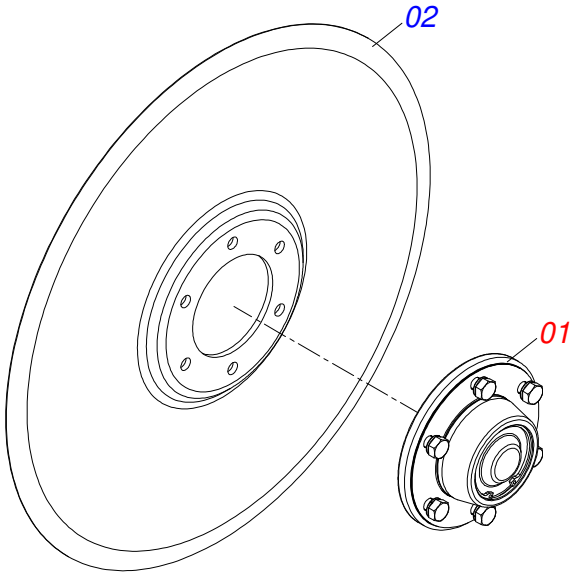

Item	Code	Description	See page	QT
01	0521055865	ASSY LEFT HUB DDD FERTILIZER / SEED	177	01
02	0612023500	DPL CPR 15X4 C123 AFSFR72,00+6FR D568		01

ASSY RIGHT HUB DDD FERTILIZER / SEED

0521055864

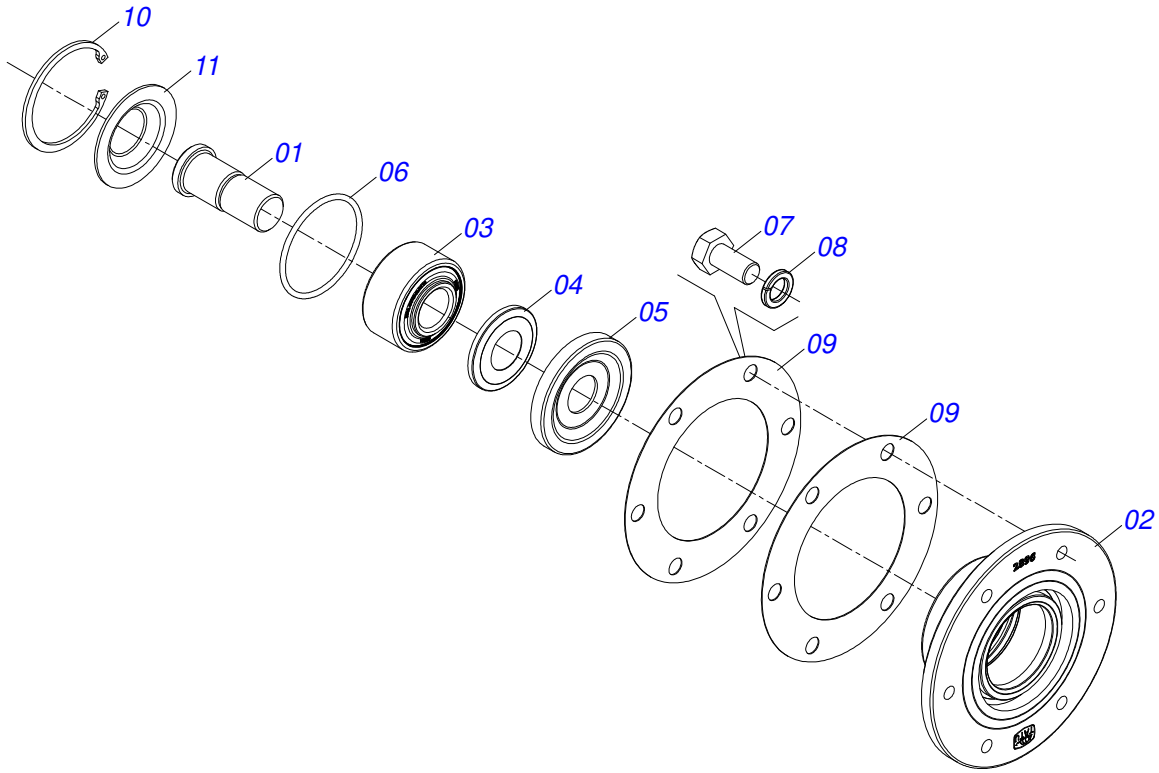

Item	Code	Description	See page	QT
01	0571011150	RIGHT DOUB DISC - HUB		01
02	0502012896	LOW CUBE FERTILIZER / SEED BOX		01
03	0503019342	ROLLER BEARING		01
04	0503034055	CLAMPING RING		01
05	0511011927	DUST CLOAK		01
06	0503014679	2-134 O'RING		01
07	0503019377	SCREW 5/16 UNC X 5/8 C S R I G.8 ZN		06
08	0503010179	LOCK WASHER		06
09	0591010493	WASHER DDD FERTILIZER / SEED		02
10	0503015081	502052 CLAMPING RING (FOR AXLE)		01
11	0571011152	DOUBLE DISC CAP		01

ASSY LEFT HUB DDD FERTILIZER / SEED

0521055865

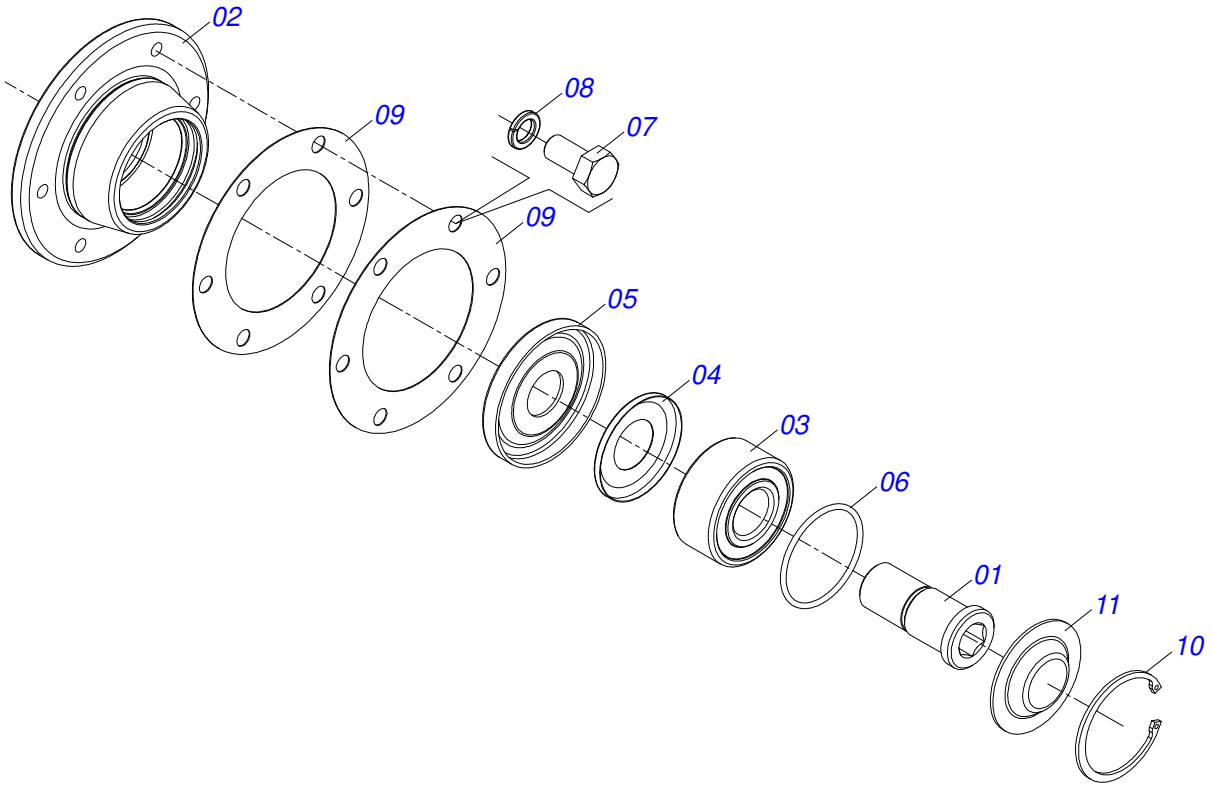

Item	Code	Description	See page	QT
01	0571011151	LEFT DOUBLE DISC HUB		01
02	0502012896	LOW CUBE FERTILIZER / SEED BOX		01
03	0503019342	ROLLER BEARING		01
04	0503034055	CLAMPING RING		01
05	0511011927	DUST CLOAK		01
06	0503014679	2-134 O'RING		01
07	0503019377	SCREW 5/16 UNC X 5/8 C S R I G.8 ZN		06
08	0503010179	LOCK WASHER		06
09	0591010493	WASHER DDD FERTILIZER / SEED		02
10	0503015081	502052 CLAMPING RING (FOR AXLE)		01
11	0571011152	DOUBLE DISC CAP		01

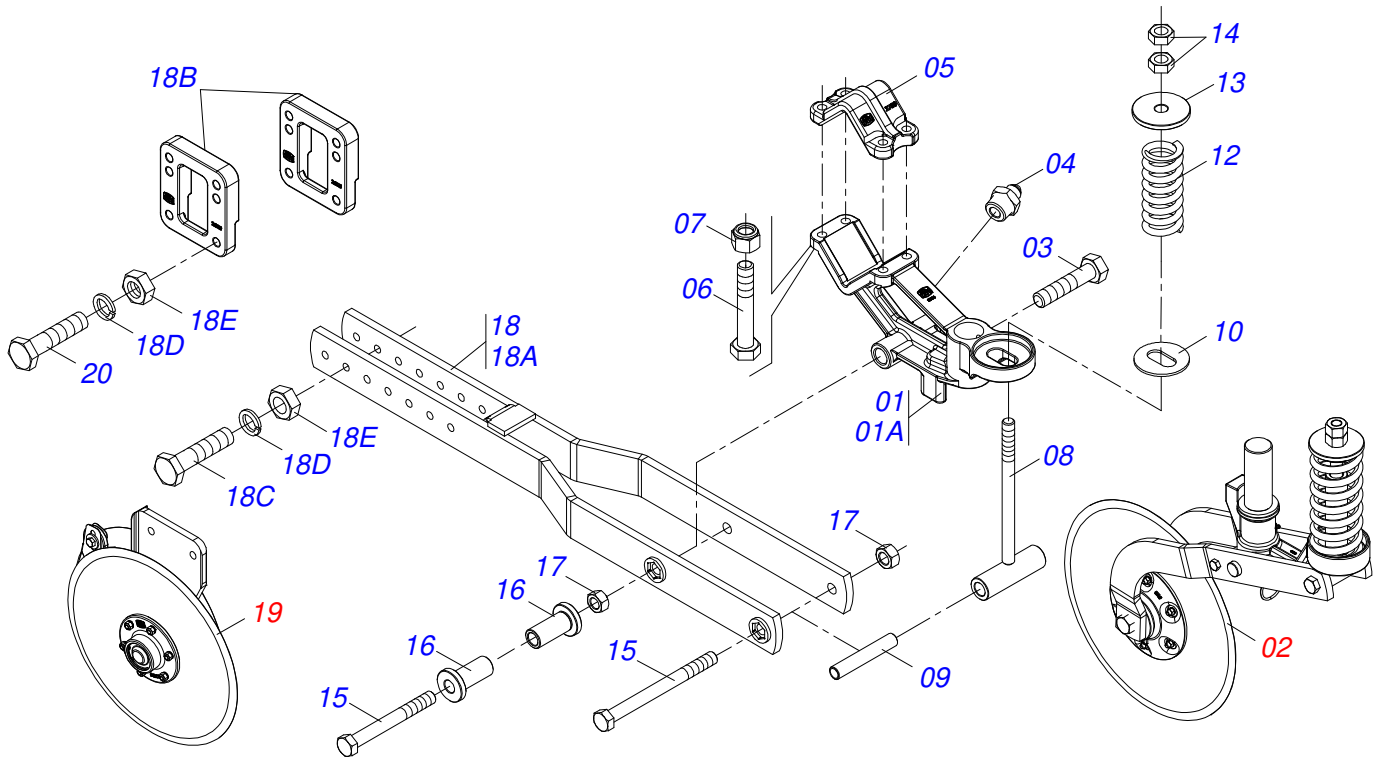

Item	Code	Description	See page	QT
01	0511058633	FIXED SHORT SUPPORT FERTILIZER ROW		01
01A	0502012794	SHORT SUPPORT FERTILIZER ROW		01
02	0511058629	18” COULTER BLADE ASSY FOR SHORT ROW	186	01
03	0503011854	5/8" X 1-1/4" BOLT		02
04	0503010002	1800 GREASE FITTING		01
05	0502012789	FIXER SUPPORT FERTILIZER ROW		01
06	0503017960	5/8" X 3-12" BOLT		04
07	0503010811	5/8" UNF SELF ADJUSTING NUT		04
08	0521066744	FERTILIZER ROW ADJUSTMENT SPRING		01
09	0571019062	SLEEVE		01
10	0571019059	SUPPORT WASHER		01
12	0503034320	COMPRESSSION SPRING		01
13	0502012813	FLANGE WASHER SPRING		01
14	0503010417	7/8" NUT		02
15	0511016281	3/4" X 8" BOLT		02
16	0571019061	FERTILIZER ROW SUPPORT ARM SLEEVE		02
17	0503011255	3/4" LOCK NUT		02
18	0511057272	LH SHORT ARM ROW FERTILIZER		01
18A	0521065972	LH SHORT ARM ROW FERTILIZER		01
18B	0502012815	DOUBLE-DISC SPACING PLATE		02
18C	0503810479	BOLT		02
18D	0503011440	SPRING WASHER		04
18E	0503010060	1/2" NUT		04
19	0511053209	DDD FERTILIZER 15 X 15 LEFT MINOR	185	01
20	0503010706	BOLT 1/2 UNC X 4.1/2 C S G.5 ZN		02

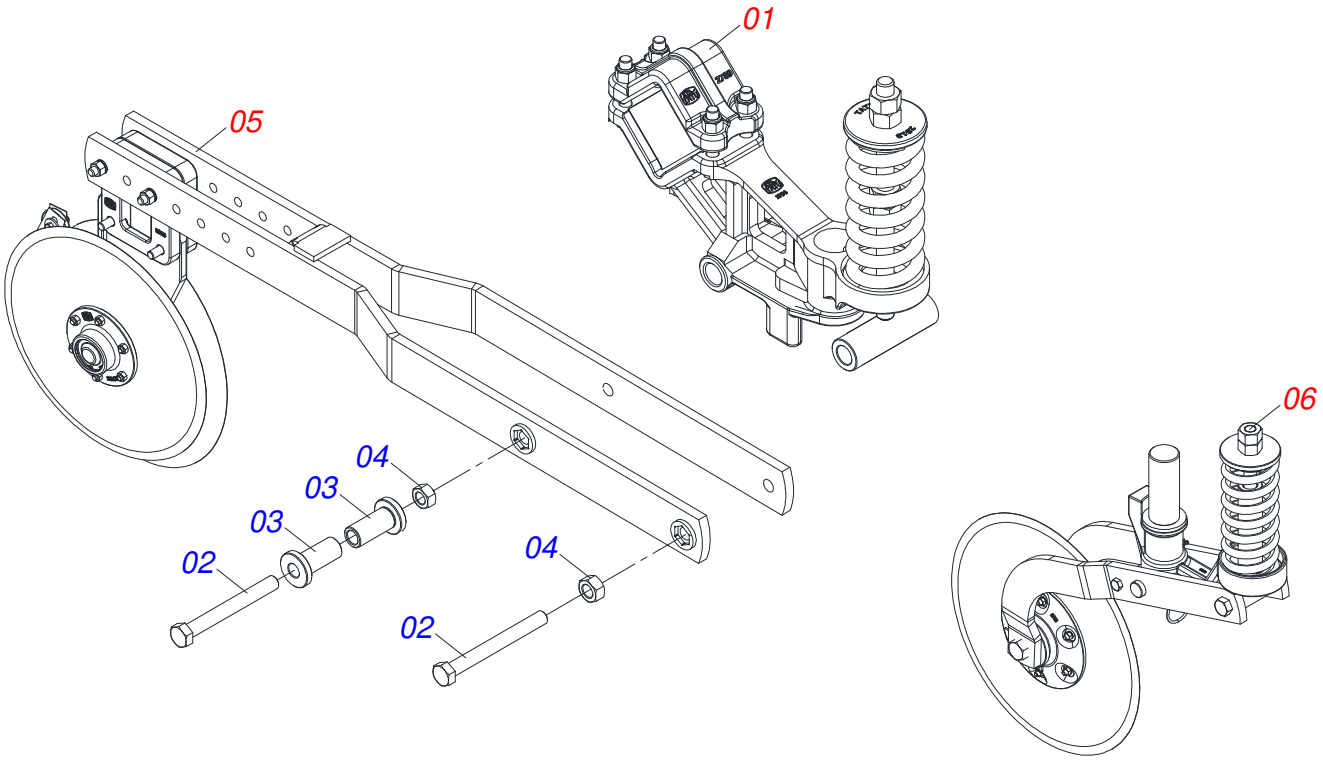

Item	Code	Description	See page	QT
01	0511058633	FIXED SHORT SUPPORT FERTILIZER ROW		01
02	0511016281	3/4" X 8" BOLT		02
03	0571019061	FERTILIZER ROW SUPPORT ARM SLEEVE		02
04	0503011255	3/4" LOCK NUT		02
05	0511057272	LH SHORT ARM ROW FERTILIZER		01
06	0511058630	20" DISC CUT	187	01

SHORT FERTILIZER ROW

0511059051

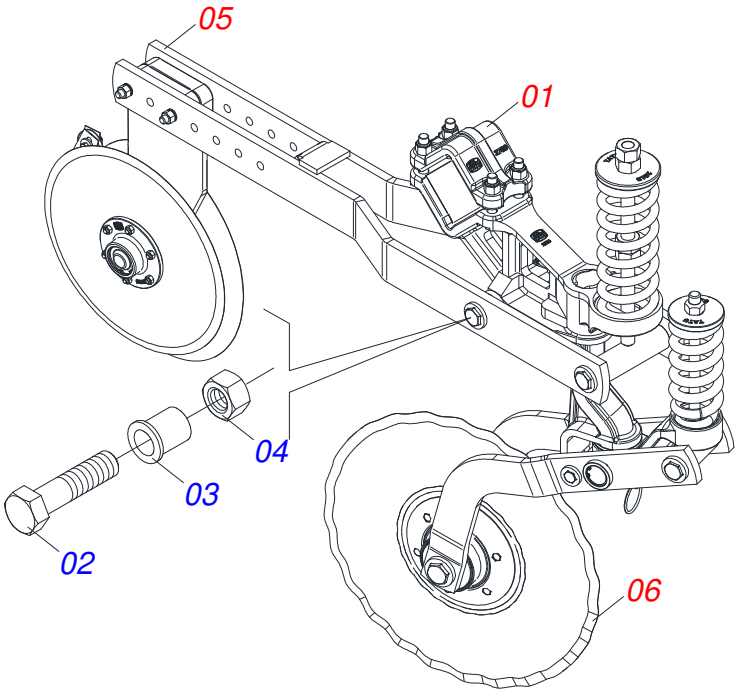

Item	Code	Description	See page	QT
01	0511058633	FIXED SHORT SUPPORT FERTILIZER ROW		01
02	0511016281	3/4" X 8" BOLT		02
03	0571019061	FERTILIZER ROW SUPPORT ARM SLEEVE		02
04	0503011255	3/4" LOCK NUT		02
05	0511057272	LH SHORT ARM ROW FERTILIZER		01
06	0511059050	DOC 20" ASSY	188	01

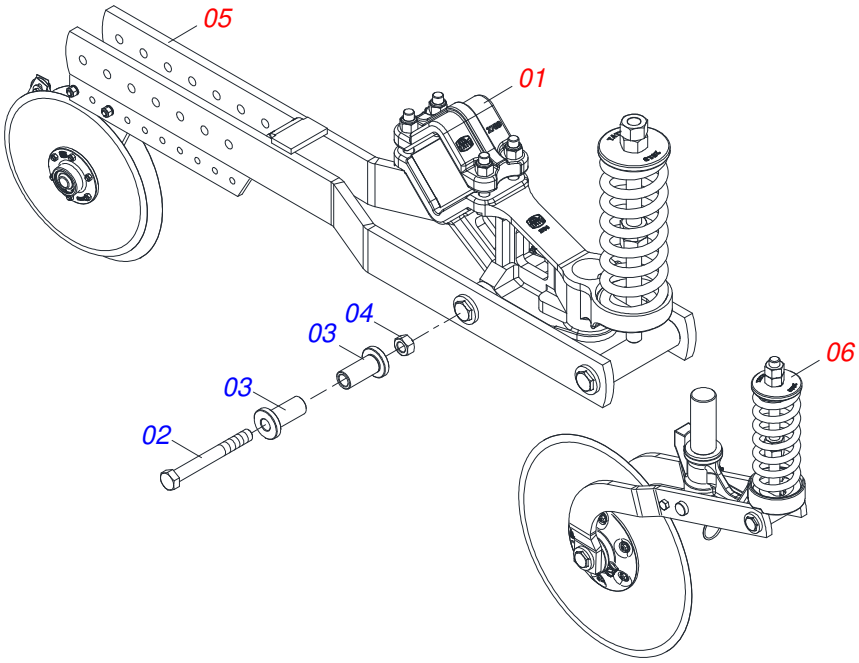

Item	Code	Description	See page	QT
01	0511058634	SUPPORT LONG		01
02	0511016281	3/4" X 8" BOLT		02
03	0571019061	FERTILIZER ROW SUPPORT ARM SLEEVE		02
04	0503011255	3/4" LOCK NUT		02
05	0511057271	RH LONG ARM ROW FERTILIZER		01
06	0511058629	18” COULTER BLADE ASSY FOR SHORT ROW	186	01

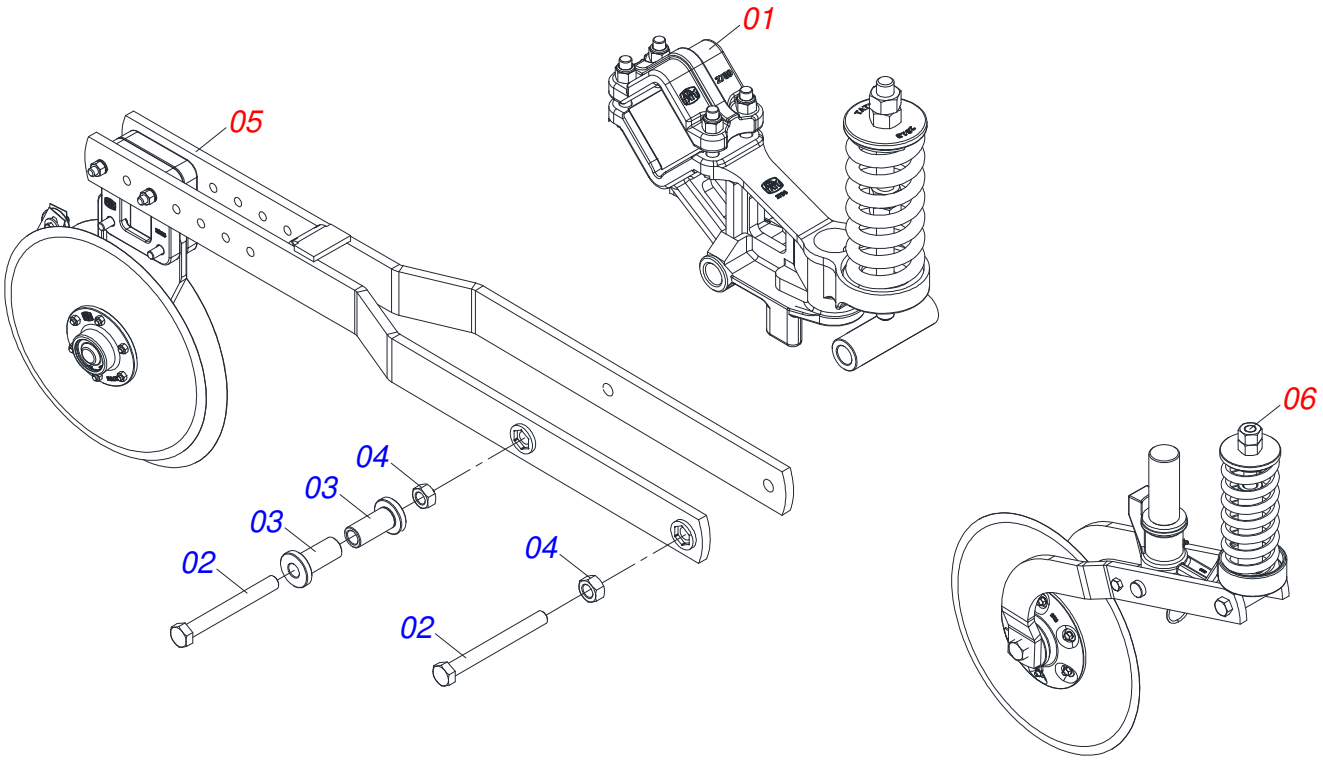

Item	Code	Description	See page	QT
01	0511058634	SUPPORT LONG		01
02	0511016281	3/4" X 8" BOLT		02
03	0571019061	FERTILIZER ROW SUPPORT ARM SLEEVE		02
04	0503011255	3/4" LOCK NUT		02
05	0511057271	RH LONG ARM ROW FERTILIZER		01
06	0511058630	20" DISC CUT	187	01

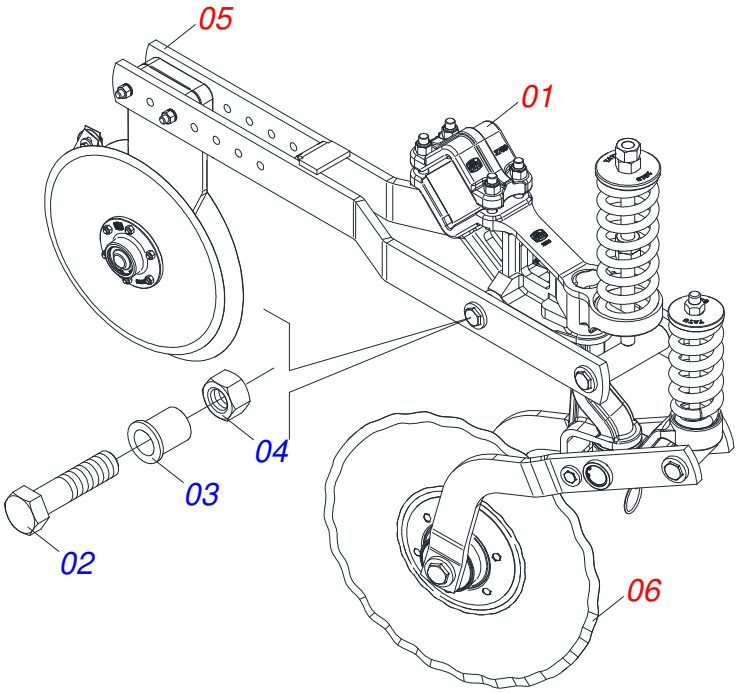

Item	Code	Description	See page	QT
01	0511058634	SUPPORT LONG		01
02	0511016281	3/4" X 8" BOLT		02
03	0571019061	FERTILIZER ROW SUPPORT ARM SLEEVE		02
04	0503011255	3/4" LOCK NUT		02
05	0511057271	RH LONG ARM ROW FERTILIZER		01
06	0511059050	DOC 20" ASSY	188	01

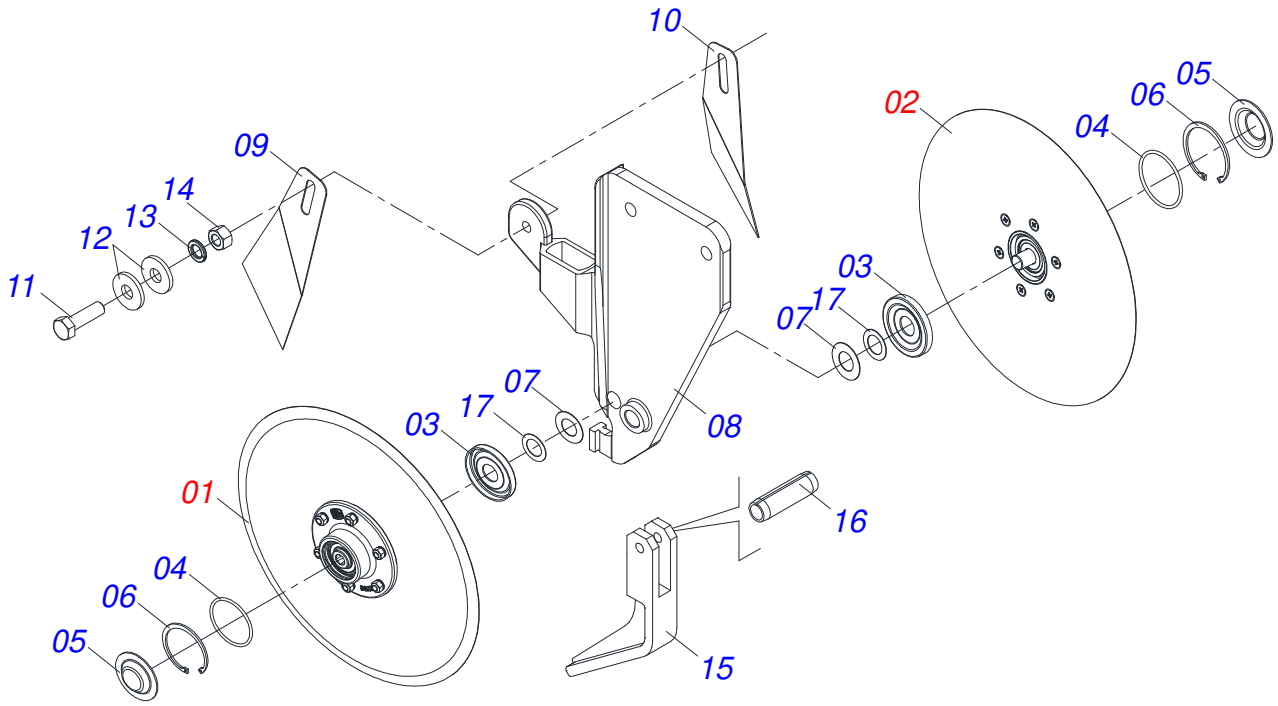

Item	Code	Description	See page	QT
01	0511053173	CUBE LOW RIGHT WITH DISC 15	167	01
02	0511053172	LEFT LOW CUBE WITH DISC 15	168	01
03	0511011927	DUST CLOAK		02
04	0503014679	2-134 O'RING		02
05	0571011152	DOUBLE DISC CAP		02
06	0503015081	502052 CLAMPING RING (FOR AXLE)		02
07	0511815098	FLAT WASHER		02
08	0502011160	15"X15" RIGHT DOUBLE DISC SUPPORT		01
09	0501017542	LH DOUBLE DISC SCRAPER		01
10	0501017541	RIGHT DOUBLE DISC SCRAPER		01
11	0503010751	C3/8" X 1.1/4" HEX BOLT G.5		01
12	0501010984	FLAT WASHER		02
13	0503010025	3/8" SPRING WASHER		01
14	0503010026	3/8" NUT		01
15	0502070062	SCRAPER		01
16	0503011402	0.2" X 0.8" SPRING PIN		01
17	0591014250	19 X 26 X 0,50 FLAT WASHER		02

DDD FERTILIZER 15 X 15 LEFT MINOR

0511053209

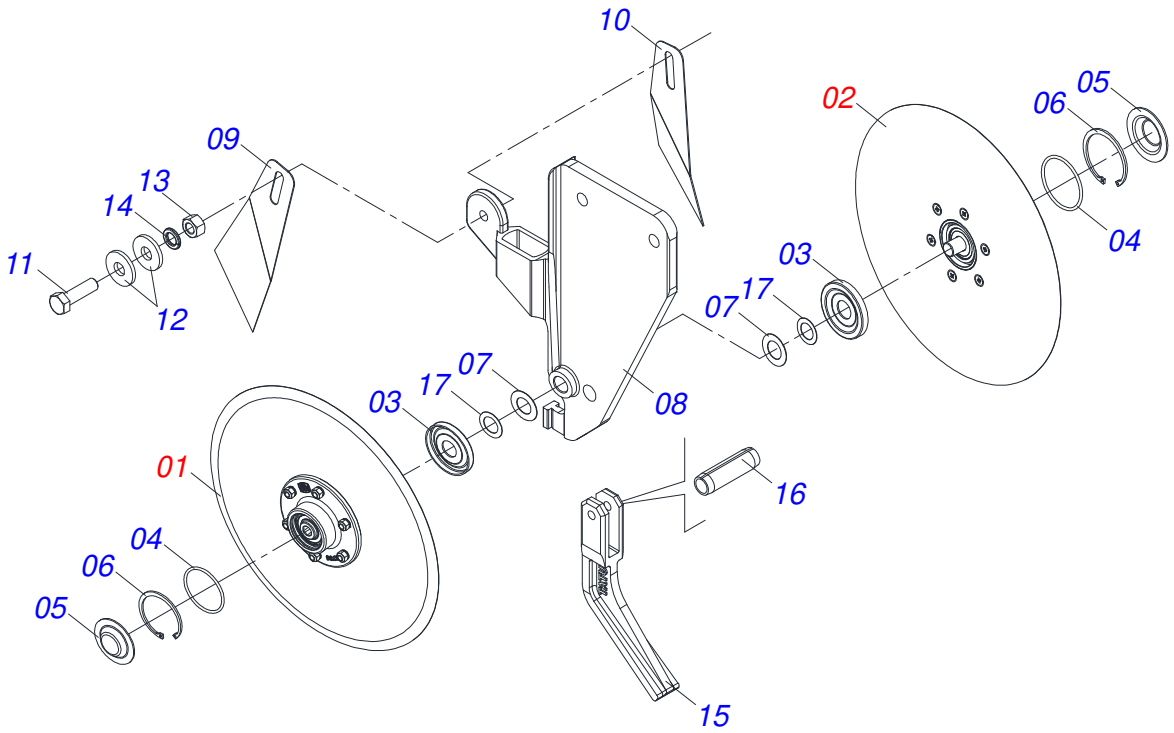

Item	Code	Description	See page	QT
01	0511053172	LEFT LOW CUBE WITH DISC 15	168	01
02	0511053173	CUBE LOW RIGHT WITH DISC 15	167	01
03	0511011927	DUST CLOAK		02
04	0503014679	2-134 O'RING		02
05	0571011152	DOUBLE DISC CAP		02
06	0503015081	502052 CLAMPING RING (FOR AXLE)		02
07	0511815098	FLAT WASHER		02
08	0502011161	15"X15" LEFT DOUBLE DISC SUPPORT		01
09	0501017542	LH DOUBLE DISC SCRAPER		01
10	0501017541	RIGHT DOUBLE DISC SCRAPER		01
11	0503010751	C3/8" X 1.1/4" HEX BOLT G.5		01
12	0501010984	FLAT WASHER		02
13	0503010026	3/8" NUT		01
14	0503010025	3/8" SPRING WASHER		01
15	0502070062	SCRAPER		01
16	0503011402	0.2" X 0.8" SPRING PIN		01
17	0591014250	19 X 26 X 0,50 FLAT WASHER		02

18” COULTER BLADE ASSY FOR SHORT ROW

0511058629

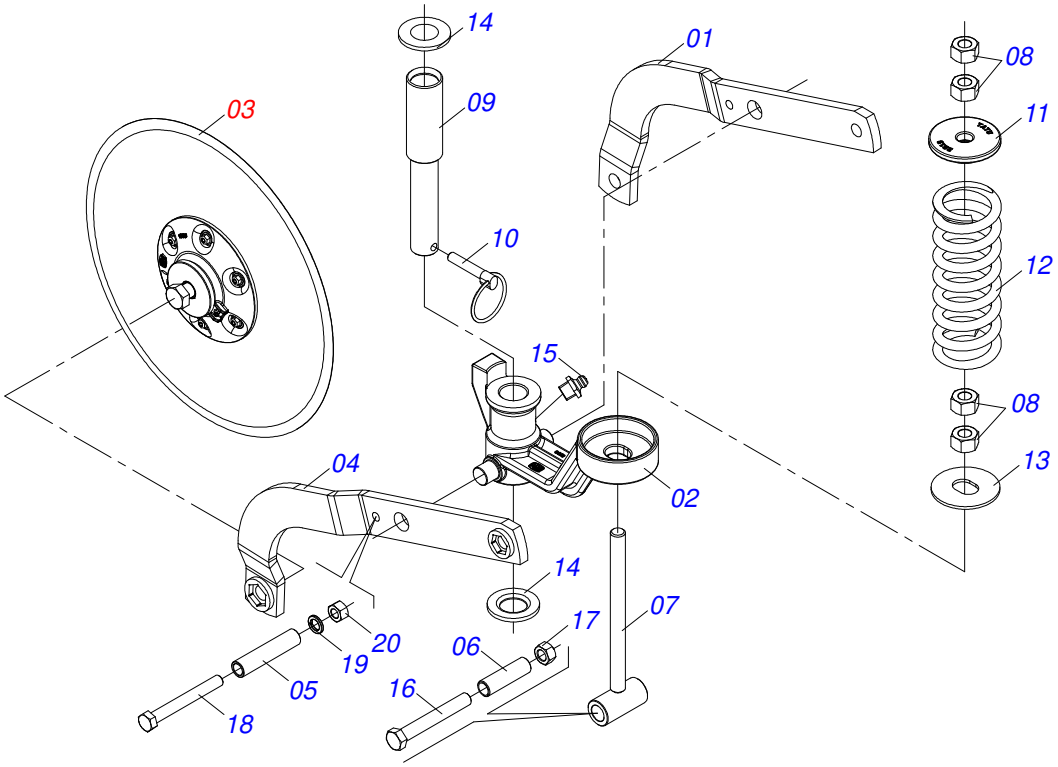

Item	Code	Description	See page	QT
01	0571018989	LH BLADE DISC ARM		01
02	0502012790	LOCK NUT		01
03	0511056910	BOX WITH DISC CUT 18		01
04	0521065978	RIGHT ARM WITH WASHER LOCK		01
05	0571019035	SLEEVE SUPPORT ARM		01
06	0521010452	SLEEVE		01
07	0521066743	REGULACION SPRING		01
08	0503010417	7/8" NUT		04
09	0571019033	FIXATION AXLE		01
10	0503034319	LOCK PIN		01
11	0502012813	FLANGE WASHER SPRING		01
12	0503034320	COMPRESSSION SPRING		01
13	0571019032	SUPPORT WASHER		01
14	0571019034	FLANGE WASHER AXLE		02
15	0503010002	1800 GREASE FITTING		01
16	0503013185	3/4" X 5-1/2" BOLT		01
17	0503011255	3/4" LOCK NUT		01
18	0503011411	1/2" X 5-1/2" BOLT		01
19	0503010019	1/2" SPRING WASHER		01
20	0503010060	1/2" NUT		01

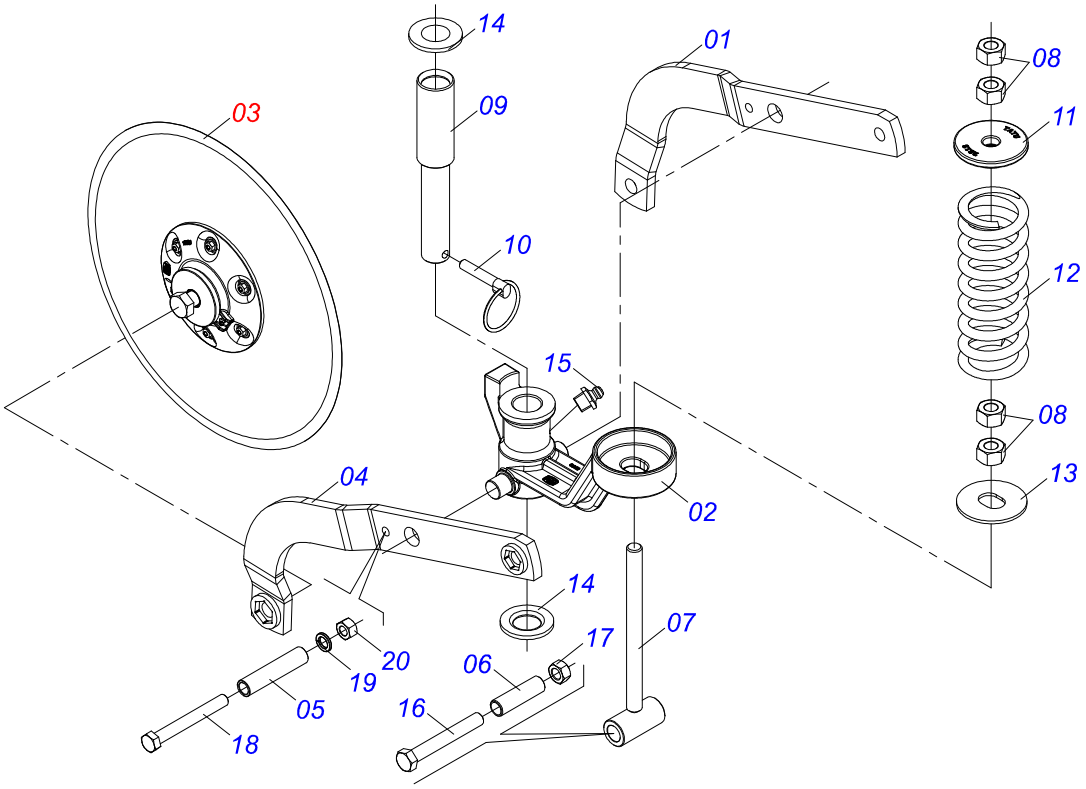

Item	Code	Description	See page	QT
01	0571018989	LH BLADE DISC ARM		01
02	0502012790	LOCK NUT		01
03	0511058648	BOX WITH DISC BLADE 20		01
04	0521065978	RIGHT ARM WITH WASHER LOCK		01
05	0571019035	SLEEVE SUPPORT ARM		01
06	0521010452	SLEEVE		01
07	0521066743	REGULACION SPRING		01
08	0503010417	7/8" NUT		04
09	0571019033	FIXATION AXLE		01
10	0503034319	LOCK PIN		01
11	0502012813	FLANGE WASHER SPRING		01
12	0503034320	COMPRESSSION SPRING		01
13	0571019032	SUPPORT WASHER		01
14	0571019034	FLANGE WASHER AXLE		02
15	0503010002	1800 GREASE FITTING		01
16	0503013185	3/4" X 5-1/2" BOLT		01
17	0503011255	3/4" LOCK NUT		01
18	0503011411	1/2" X 5-1/2" BOLT		01
19	0503011440	SPRING WASHER		01
20	0503010060	1/2" NUT		01

DOC 20" ASSY

0511059050

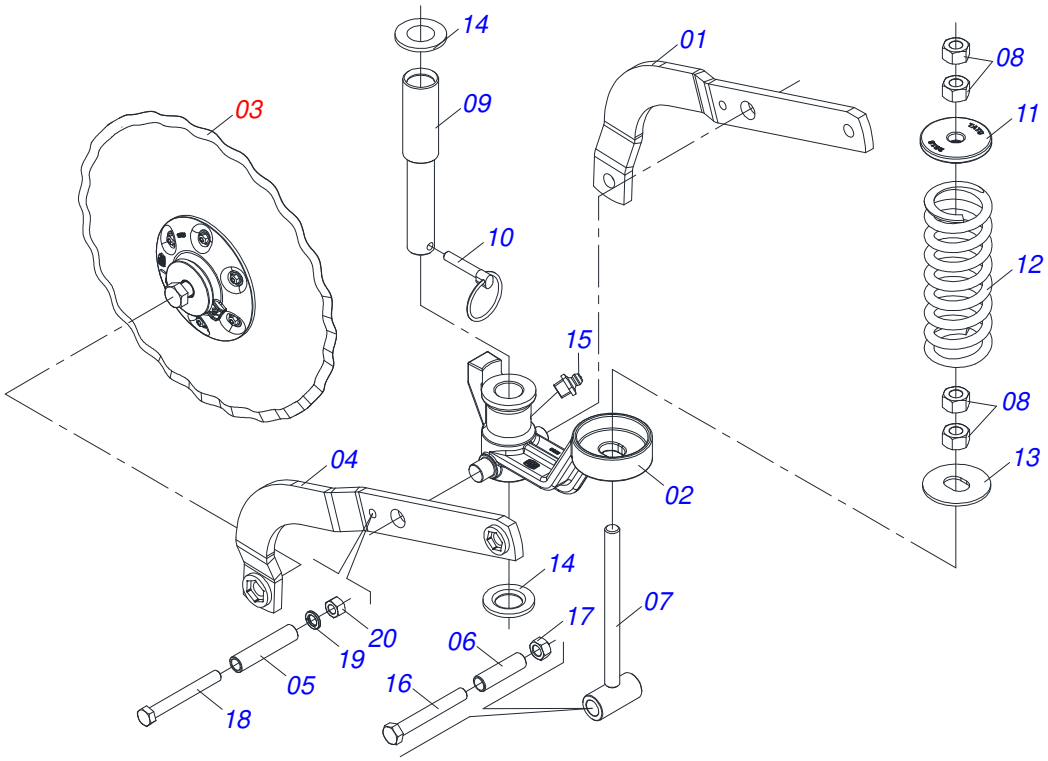

Item	Code	Description	See page	QT
01	0571018989	LH BLADE DISC ARM		01
02	0502012790	LOCK NUT		01
03	0511058838	20 CORRUGATED CUTTING DISC HUB		01
04	0521065978	RIGHT ARM WITH WASHER LOCK		01
05	0571019035	SLEEVE SUPPORT ARM		01
06	0521010452	SLEEVE		01
07	0521066743	REGULACION SPRING		01
08	0503010417	7/8" NUT		04
09	0571019033	FIXATION AXLE		01
10	0503034319	LOCK PIN		01
11	0502012813	FLANGE WASHER SPRING		01
12	0503034320	COMPRESSSION SPRING		01
13	0571019032	SUPPORT WASHER		01
14	0571019034	FLANGE WASHER AXLE		02
15	0503010002	1800 GREASE FITTING		01
16	0503013185	3/4" X 5-1/2" BOLT		01
17	0503011255	3/4" LOCK NUT		01
18	0503011411	1/2" X 5-1/2" BOLT		01
19	0503010019	1/2" SPRING WASHER		01
20	0503010060	1/2" NUT		01

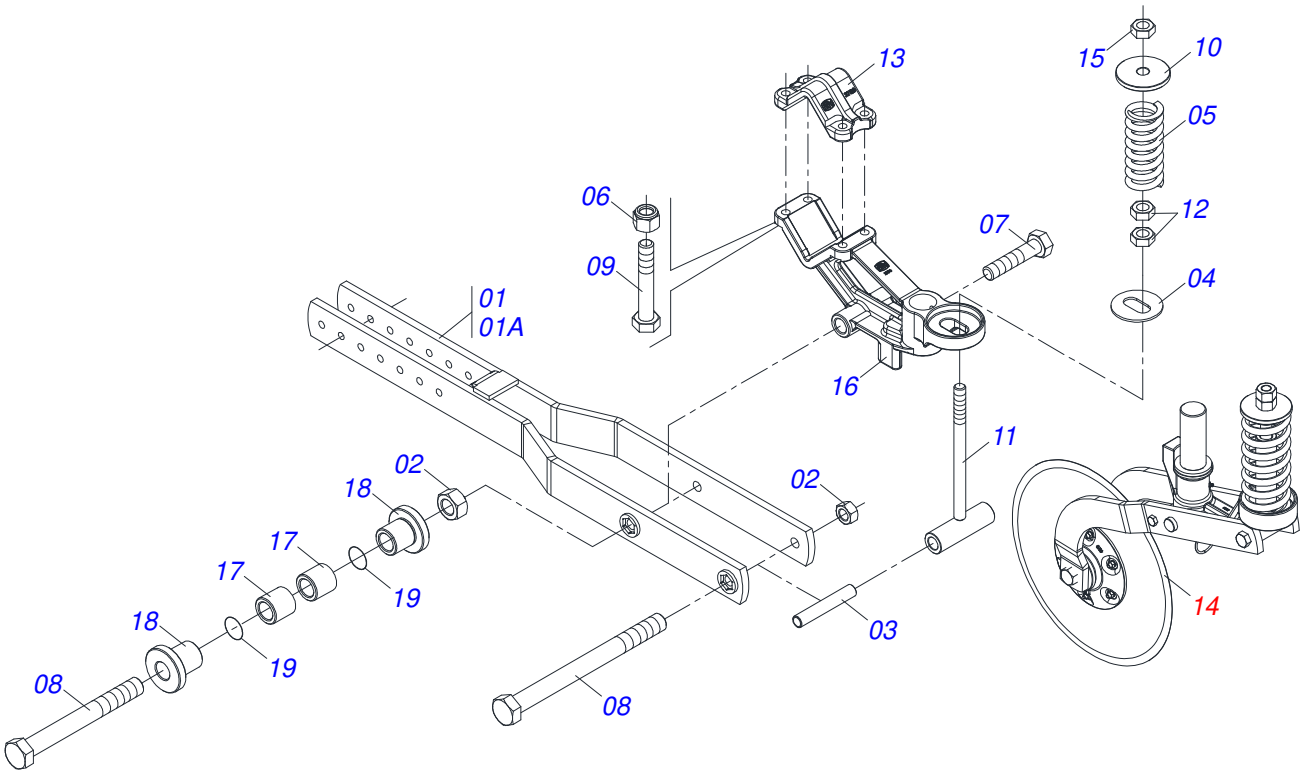

Item	Code	Description	See page	QT
01	0521065972	LH SHORT ARM ROW FERTILIZER		01
01A	0521065972	LH SHORT ARM ROW FERTILIZER		01
02	0503011255	3/4" LOCK NUT		02
03	0571019062	SLEEVE		01
04	0571019059	SUPPORT WASHER		01
05	0503034320	COMPRESSSION SPRING		01
06	0503010811	5/8" UNF SELF ADJUSTING NUT		04
07	0503011854	5/8" X 1-1/4" BOLT		02
08	0511016281	3/4" X 8" BOLT		02
09	0503017960	5/8" X 3-12" BOLT		04
10	0502012813	FLANGE WASHER SPRING		01
11	0521066744	FERTILIZER ROW ADJUSTMENT SPRING		01
12	0503010417	7/8" NUT		02
13	0502012789	FIXER SUPPORT FERTILIZER ROW		01
14	0521056476	DC 20" ASSY	195	01
15	0503011254	7/8" HEX SELF ADJUSTING NUT		01
16	0591011145	FERTILIZER ROW SUPPORT		01
17	0503019278	LUBRICANT SLEEVE		02
18	0591011147	SLEEVE ARM ROW		02
19	0503011109	2-119 N 3006-9B O'RING		02

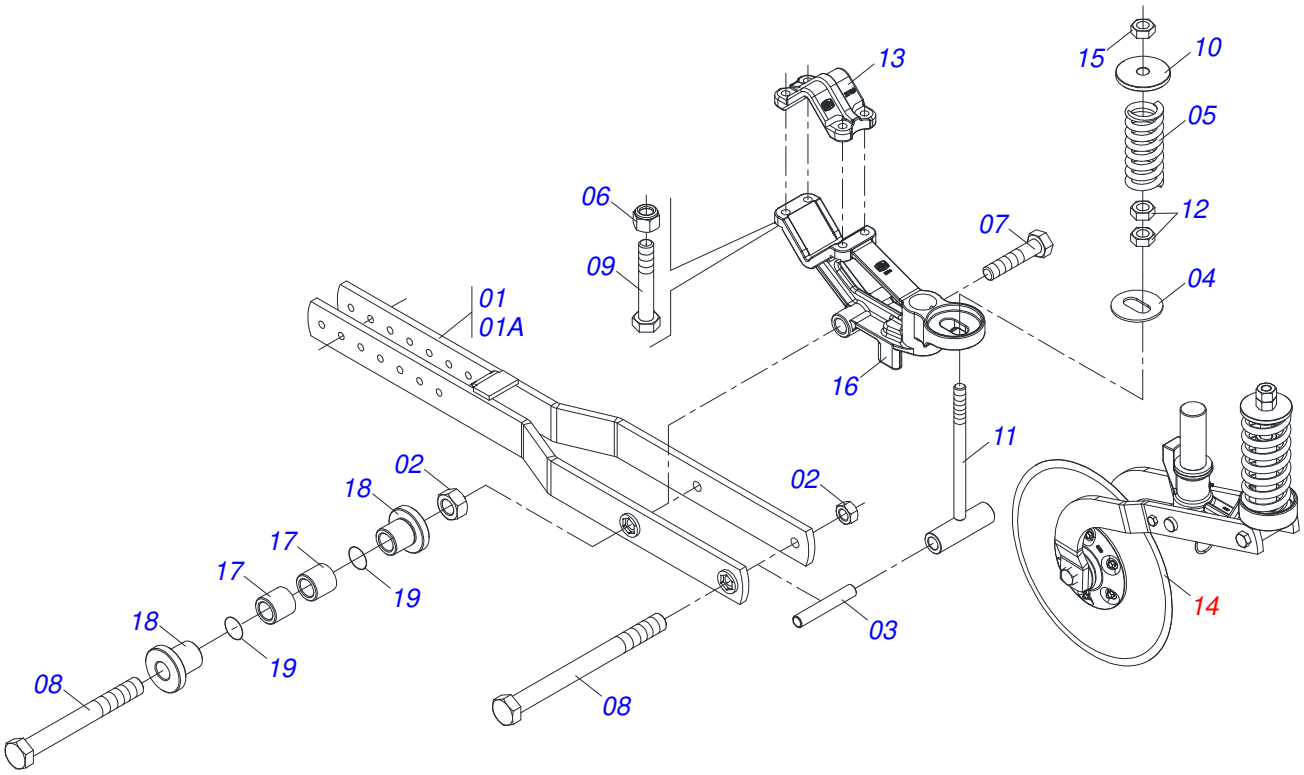

Item	Code	Description	See page	QT
01	0521065973	RH LONG ARM ROW FERTILIZER		01
01A	0511057271	RH LONG ARM ROW FERTILIZER		01
02	0503011255	3/4" LOCK NUT		02
03	0571019062	SLEEVE		01
04	0571019059	SUPPORT WASHER		01
05	0503034320	COMPRESSSION SPRING		01
06	0503010811	5/8" UNF SELF ADJUSTING NUT		04
07	0503011854	5/8" X 1-1/4" BOLT		02
08	0511016281	3/4" X 8" BOLT		02
09	0503017960	5/8" X 3-12" BOLT		04
10	0502012813	FLANGE WASHER SPRING		01
11	0521066744	FERTILIZER ROW ADJUSTMENT SPRING		01
12	0503010417	7/8" NUT		02
13	0502012789	FIXER SUPPORT FERTILIZER ROW		01
14	0521056476	DC 20" ASSY	195	01
15	0503011254	7/8" HEX SELF ADJUSTING NUT		01
16	0591011146	SUPPORT LONG		01
17	0503019278	LUBRICANT SLEEVE		02
18	0591011147	SLEEVE ARM ROW		02
19	0503011109	2-119 N 3006-9B O'RING		02

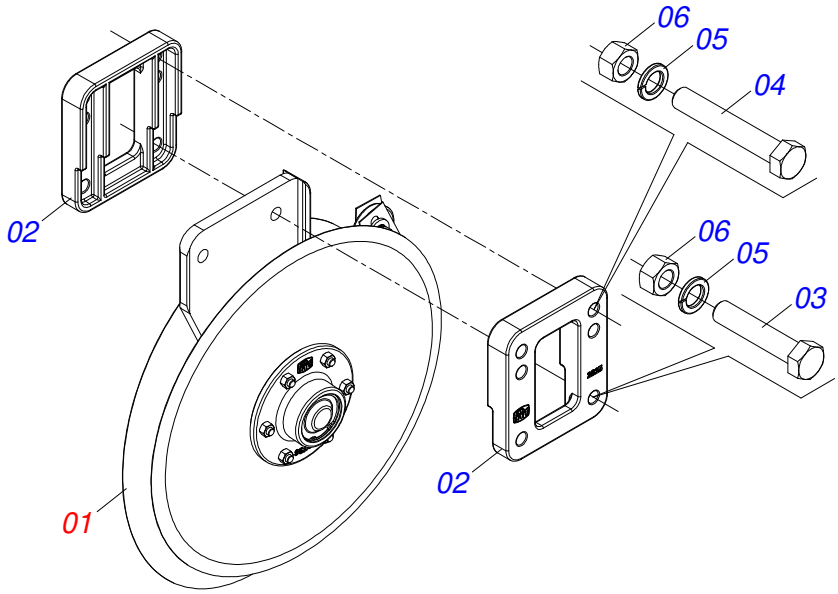

Item	Code	Description	See page	QT
01	0521055868	RIGHT DUAL FERTILIZER DISC	193	01
02	0502012815	DOUBLE-DISC SPACING PLATE		02
03	0503010479	BOLT		02
04	0503010706	BOLT 1/2 UNC X 4.1/2 C S G.5 ZN		02
05	0503010019	1/2" SPRING WASHER		04
06	0503010060	1/2" NUT		04

LEFT DDD FERTILIZER WITH SUPPORT

0521054769

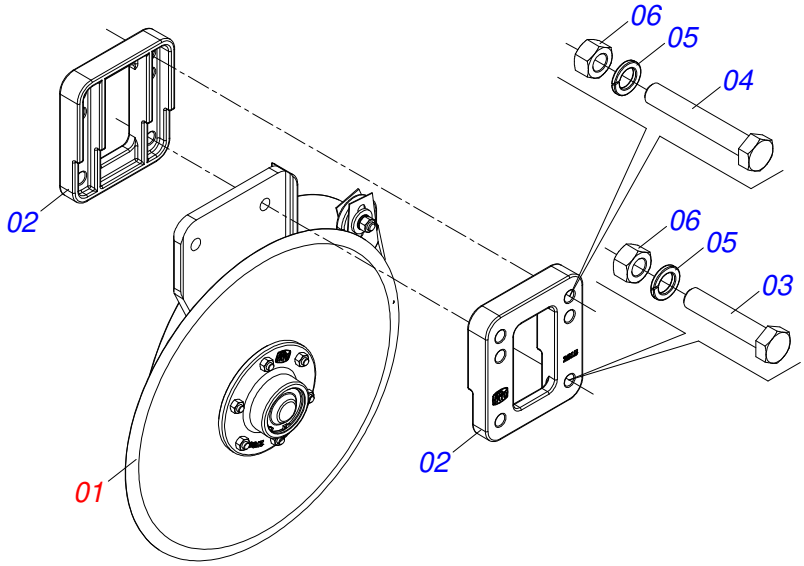

Item	Code	Description	See page	QT
01	0521055869	LEFT DUAL FERTILIZER DISC	194	01
02	0502012815	DOUBLE-DISC SPACING PLATE		02
03	0503010479	BOLT		02
04	0503010706	BOLT 1/2 UNC X 4.1/2 C S G.5 ZN		02
05	0503010019	1/2" SPRING WASHER		04
06	0503010060	1/2" NUT		04

RIGHT DUAL FERTILIZER DISC

0521055868

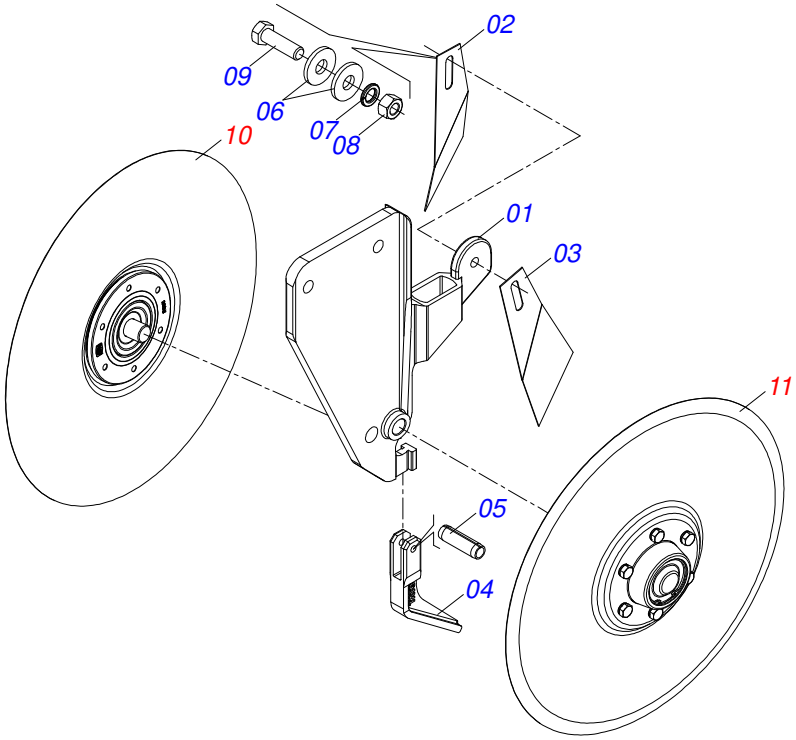

Item	Code	Description	See page	QT
01	0502011160	15"X15" RIGHT DOUBLE DISC SUPPORT		01
02	0501017542	LH DOUBLE DISC SCRAPER		01
03	0501017541	RIGHT DOUBLE DISC SCRAPER		01
04	0502070062	SCRAPER		01
05	0503011402	0.2" X 0.8" SPRING PIN		01
06	0501010984	FLAT WASHER		02
07	0503010025	3/8" SPRING WASHER		01
08	0503010026	3/8" NUT		01
09	0503010751	C3/8" X 1.1/4" HEX BOLT G.5		01
10	0521055866	HUB RIGHT QUICK-CHANGE DPL 15 X 4.00 FERTILIZER / SEED	174	01
11	0521055867	HUB LEFT QUICK-CHANGE DPL 15 X 4.00 FERTILIZER / SEED	175	01

LEFT DUAL FERTILIZER DISC

0521055869

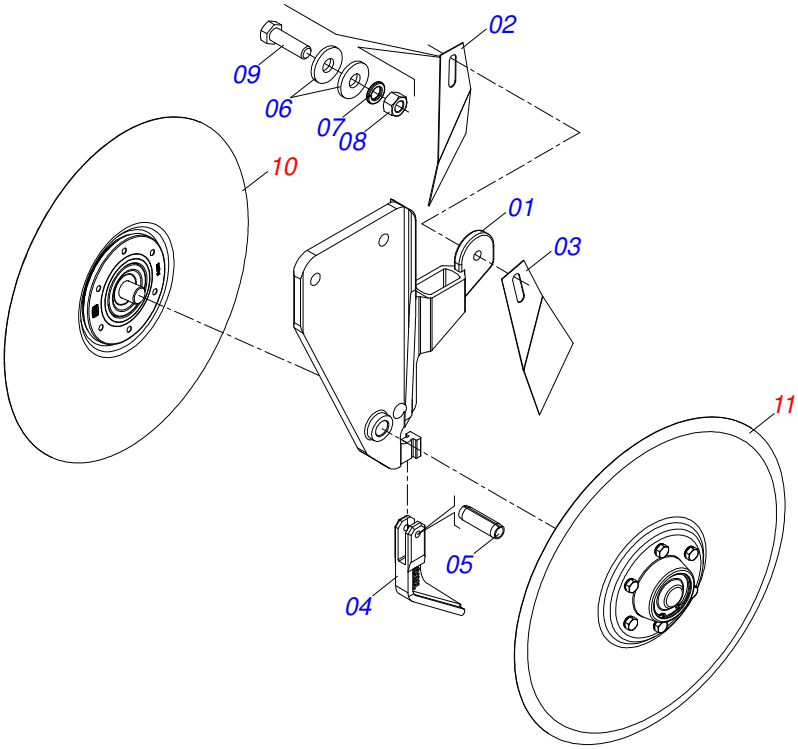

Item	Code	Description	See page	QT
01	0502011161	15"X15" LEFT DOUBLE DISC SUPPORT		01
02	0501017542	LH DOUBLE DISC SCRAPER		01
03	0501017541	RIGHT DOUBLE DISC SCRAPER		01
04	0502070062	SCRAPER		01
05	0503011402	0.2" X 0.8" SPRING PIN		01
06	0501010984	FLAT WASHER		02
07	0503010025	3/8" SPRING WASHER		01
08	0503010026	3/8" NUT		01
09	0503010751	C3/8" X 1.1/4" HEX BOLT G.5		01
10	0521055866	HUB RIGHT QUICK-CHANGE DPL 15 X 4.00 FERTILIZER / SEED	174	01
11	0521055867	HUB LEFT QUICK-CHANGE DPL 15 X 4.00 FERTILIZER / SEED	175	01

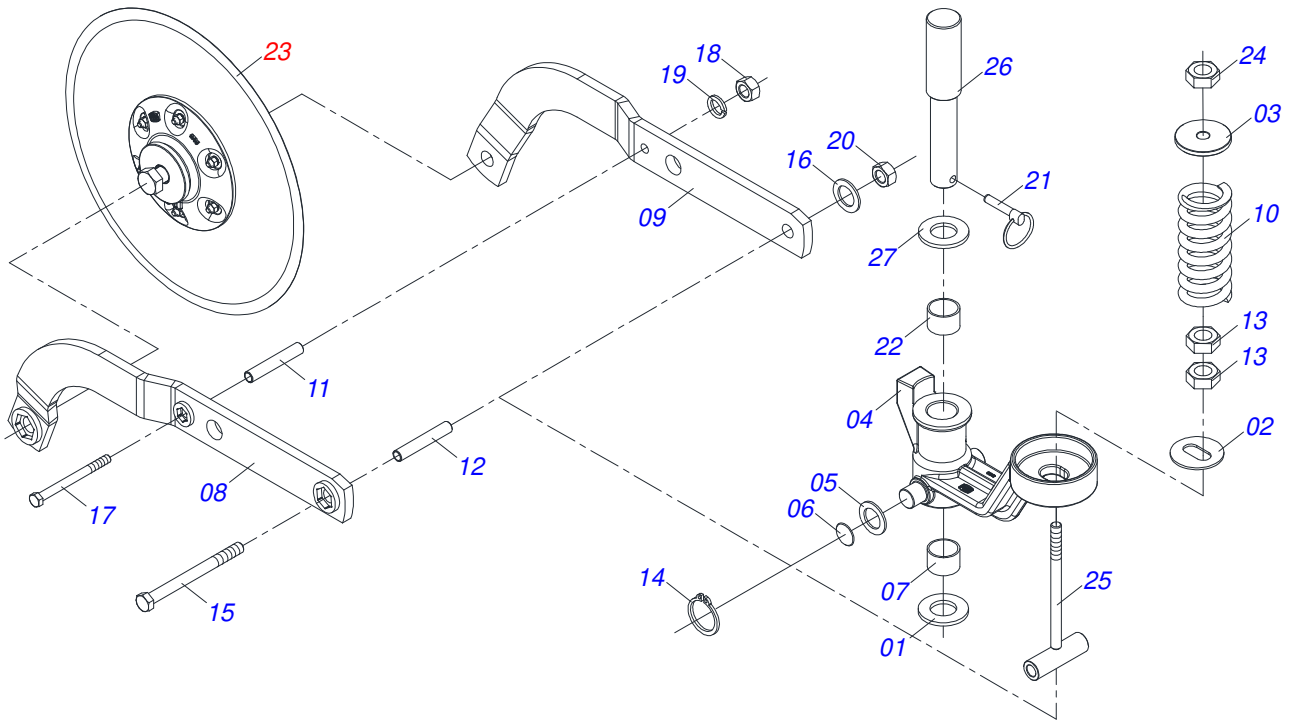

Item	Code	Description	See page	QT
001	0571019034	FLANGE WASHER AXLE		01
002	0571019032	SUPPORT WASHER		01
003	0502012813	FLANGE WASHER SPRING		01
004	0591010619	DC SPRING SUPPORT		01
005	0503019274	WASHER		02
006	0581017628	COVER		02
007	0503019277	SLEEVE LUBRICATION SYSTEM		01
008	0501110964	RIGHT ARM WITH SLEEVE		01
009	0501110965	LEFT ARM WITH SLEEVE		01
010	0503034320	COMPRESSSION SPRING		01
011	0591010624	SUPPORT ARM SLEEVE		01
012	0591010625	19,50 X 25 X 91,50/91,30 SLEEVE		01
013	0503010417	7/8" NUT		02
014	0503010390	SEAL RING		02
015	0503011198	C3/4" X 6" SCREW		01
016	0501010322	FLAT WASHER		01
017	0503011411	1/2" X 5-1/2" BOLT		01
018	0503010060	1/2" NUT		01
019	0503010019	1/2" SPRING WASHER		01
020	0503011255	3/4" LOCK NUT		01
021	0503030430	7/16 X 2" PIN LOCK		01
022	0503019271	SELF LUBRICATING BUSHING		01
023	0521053248	CUTTING DISK BOX 20 CONICAL ROLLING		01
024	0503011254	7/8" HEX SELF ADJUSTING NUT		01
025	0521066743	REGULACION SPRING		01
026	0591011144	FIXATION AXLE		01
027	0591010628	DC AXIS BACKREST WASHER		01

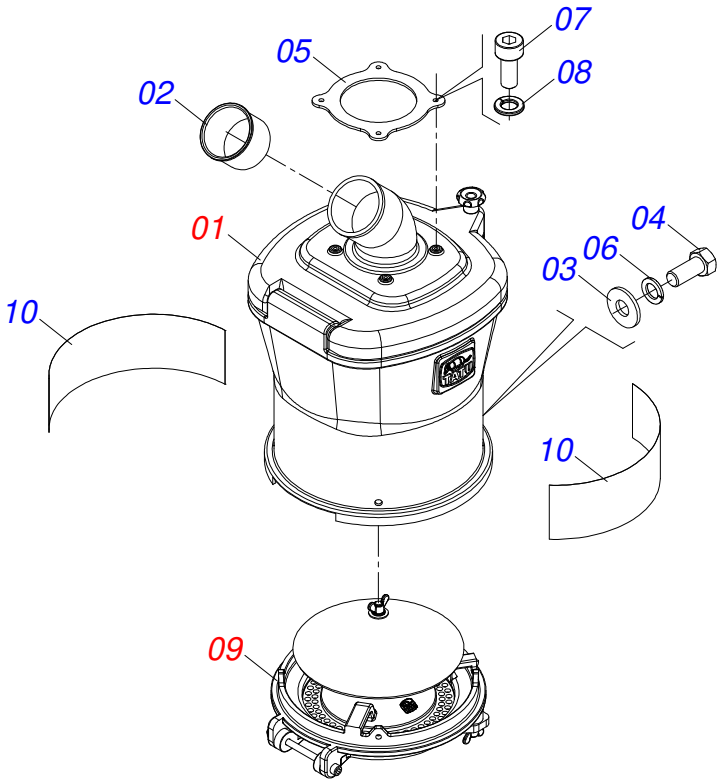

Item	Code	Description	See page	QT
01	0503063223	SEMI-ASSEMBLED SINGLE SIGMA SEED BOX	197	01
02	0581014295	FIXING SLEEVE		01
03	0503012545	FLAT WASHER		04
04	0503014442	BOLT		04
05	0591015106	SEED NOZZLE FIXING FLANGE		01
06	0513010192	LOCK WASHER		04
07	0513010191	BOLT		04
08	0503012534	LOCK WASHER		04
09	0531051514	SIGMA SOY SEED SYSTEM	198	01
10	0503035691	ADHESIVE LABEL		02

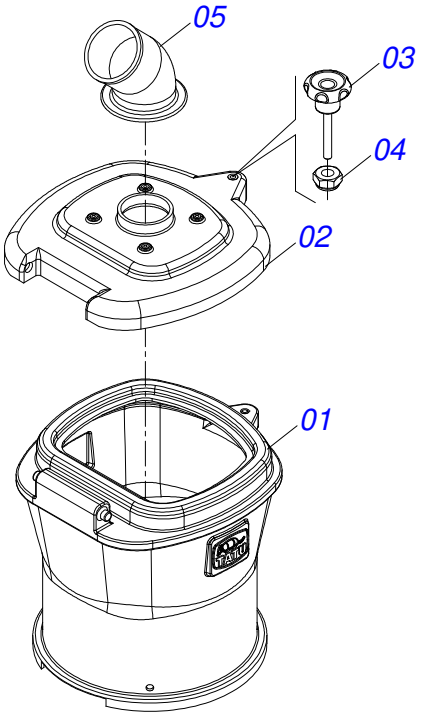

Item	Code	Description	See page	QT
01	0503035296	SINGLE SEED BOX		01
02	0503035295	DEPOSIT COVER		01
03	0503035298	BAKELITE HANDLE WITH THREAD		01
04	0503015536	M6 X 1" SELF ADJUSTING NUT		01
05	0503035297	CURVED NOZZLE SEED BOX		01

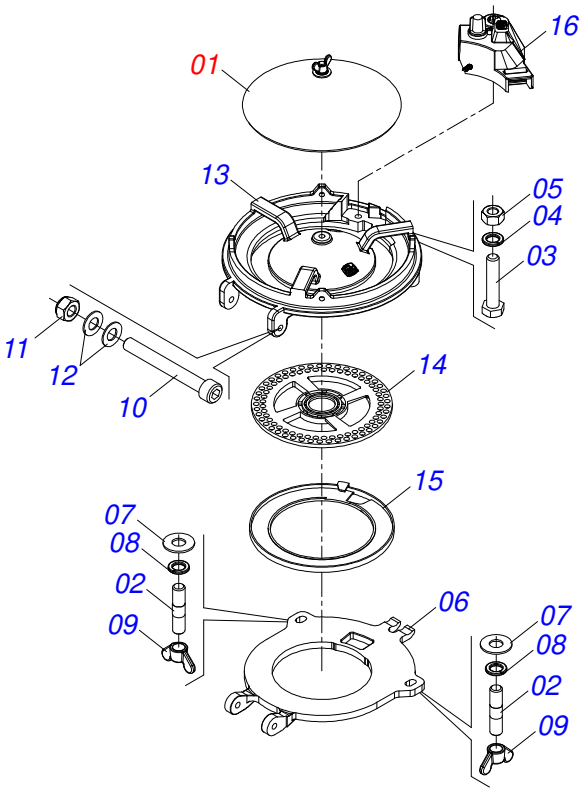

Item	Code	Description	See page	QT
01	0511057289	ASSY SEED DEFLECTOR	199	01
02	0503030083	3/8" X 3/8" X 1.6" STUD		02
03	0503010675	5/16" X 2.1/4" BOLT		01
04	0503010179	LOCK WASHER		01
05	0503010337	5/16" NUT		01
06	0502012974	LOWER SEED DISK TRACK		01
07	0501013518	FLAT WASHER		02
08	0503010025	3/8" SPRING WASHER		02
09	0503010209	3/8" UNC BUTTERFLY NUT		02
10	0503016282	ALLEN BOLT		01
11	0503019913	SELF-LOCKING NUT W/ NYLON M8 X 1.25 C.8 ZN		01
12	0503035299	PLATE SPRING 16 X 8.2 X 0.90		02
13	0591018706	SEED BOX SUPPORT		01
14	0513010140	SOYA DISK SOCIDISC 90 HOLES		01
15	0513010161	SOCIDISCO RING FOR SOY 0,8MM AZCSOJAR08-002461		01
16	0503063405	SOY SEED DISTRIBUTOR BOX		01

ASSY SEED DEFLECTOR

0511057289

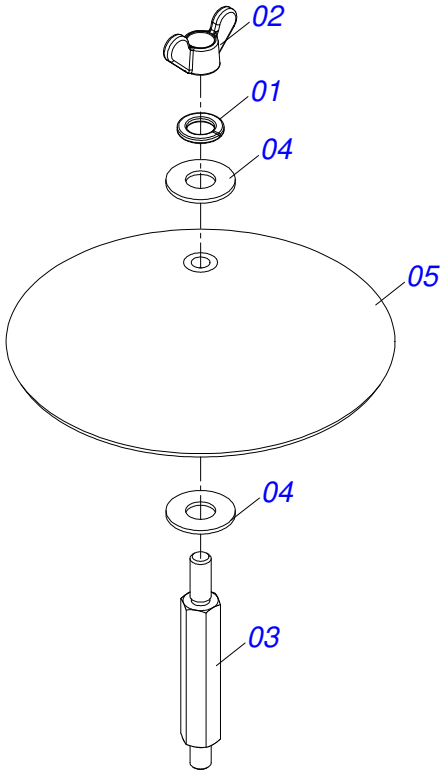

Item	Code	Description	See page	QT
01	0503010025	3/8" SPRING WASHER		01
02	0503010209	3/8" UNC BUTTERFLY NUT		01
03	0571018536	HEX PRISONER		01
04	0501013518	FLAT WASHER		02
05	0503034131	DEFLECTOR		01

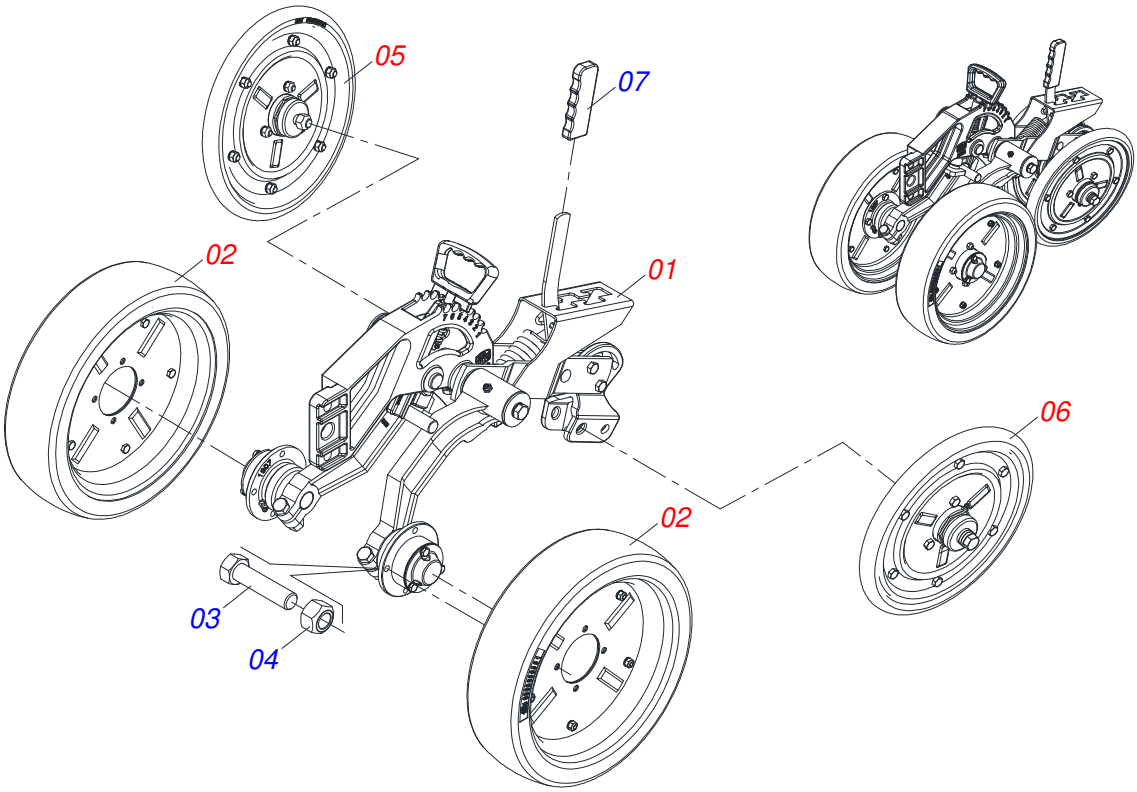

Item	Code	Description	See page	QT
01	0511058650	SEMI-MOUNTED DEPTH CONTROL	201	01
02	0501052538	DEPTH BAND WITH ARMS	206	02
03	0503010358	5/16" X 5/8" BOLT		08
04	0503013816	5/16" LOCKNUT		08
05	0511054333	COMPACT WHEEL RIGHT WITH BEARING	207	01
06	0511054334	COMPACT WHEEL LEFT WITH BEARING	208	01
07	0503033942	COVER REGULATORY WHEEL		01

SEMI-MOUNTED DEPTH CONTROL

0511058650

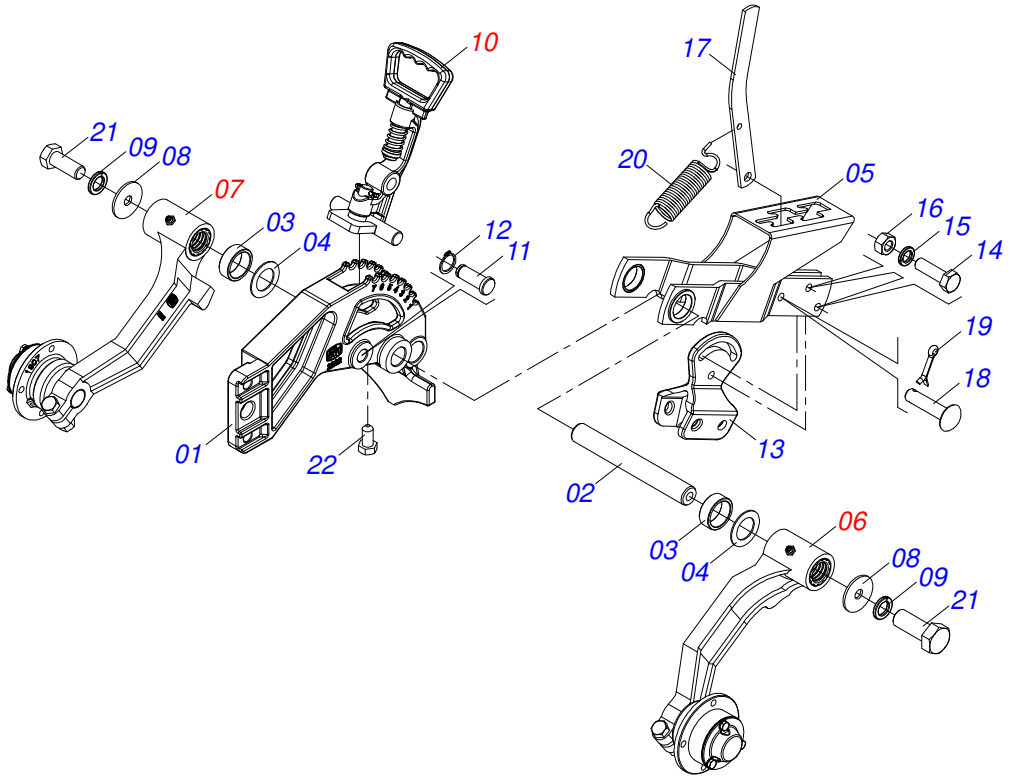

Item	Code	Description	See page	QT
01	0502012282	DEPTH CONTROL SUPPORT		01
02	0581011100	DEPTH WHEEL AXLE		01
03	0521010480	1" X 1.2" X 0.4" ARTICULAT SLEEVE		02
04	0511015346	FLAT WASHER		02
05	0521064073	REGULACION WHEEL COMPACTOR		01
06	0511058652	LEFT ARM WHEEL DEPTH WITH CUBE	203	01
07	0511058651	RIGHT ARM WHEEL DEPTH WITH CUBE	202	01
08	0571017749	FLAT WASHER		02
09	0503011440	SPRING WASHER		02
10	0501052297	DEPTH WHEELS REGULATOR ASSY	205	01
11	0521019093	0.6" X 2.7" PIVOT SHAFT		01
12	0503010581	RING		01
13	1902012116	PRESS WHEEL ADJUSTER		01
14	0503010849	3/8" X 1-1/2" BOLT		02
15	0503011443	3/8" SPRING WASHER		02
16	0503010026	3/8" NUT		02
17	0541016906	PRESS WHEELS REGULATOR BODY		01
18	0521010539	0.3" X 1.2" COUPLING SHAFT		01
19	0503010140	1/8" X 3/4" COTTERPIN		01
20	0503030805	1.6" X 6" X 0.2 TRACTION SPRING		01
21	0503010311	1/2" X 1-1/4" BOLT		02
22	0503034377	SCREEW 3/8 UNC X 3/4		01

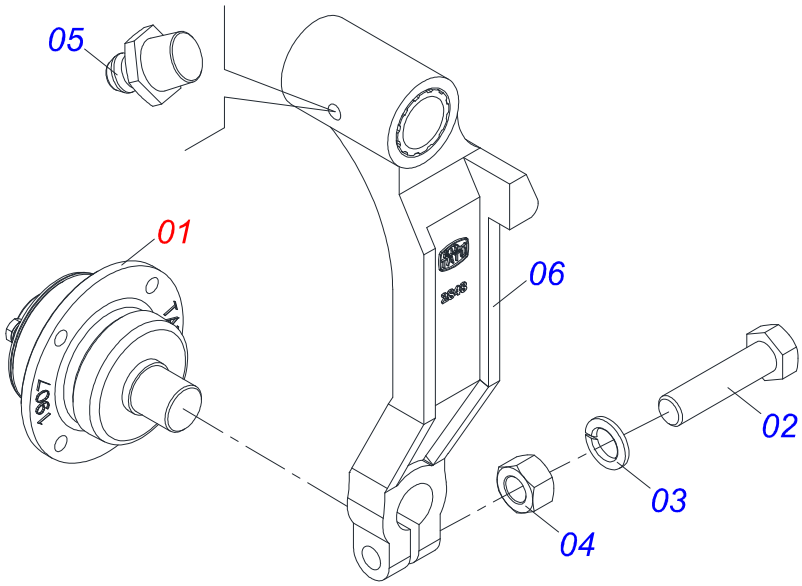

Item	Code	Description	See page	QT
01	0501052627	ASSY DEPTH WHEEL BOX	204	01
02	0503010740	BOLT 1/2 UNC X 2 CS G.5 ZN		01
03	0503011440	SPRING WASHER		01
04	0503010060	1/2" NUT		01
05	0503010002	1800 GREASE FITTING		01
06	0501110833	DEPTH CONTROL RIGHT ARM		01

LEFT ARM WHEEL DEPTH WITH CUBE

0511058652

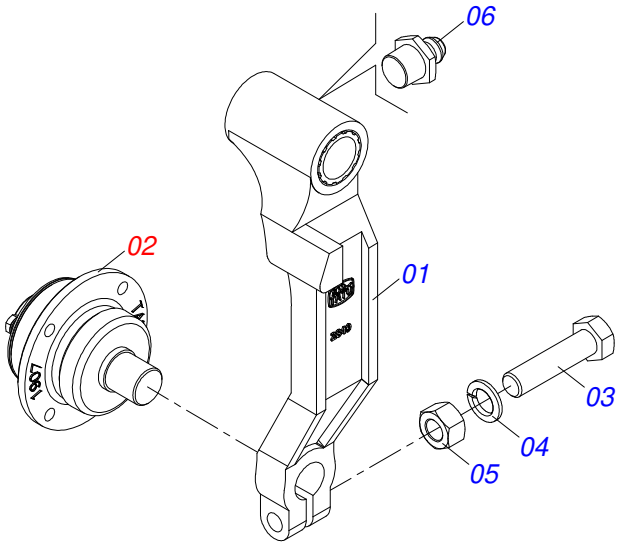

Item	Code	Description	See page	QT
01	0501110834	LH ARM		01
02	0501052627	ASSY DEPTH WHEEL BOX	204	01
03	0503010740	BOLT 1/2 UNC X 2 CS G.5 ZN		01
04	0503011440	SPRING WASHER		01
05	0503010060	1/2" NUT		01
06	0503010002	1800 GREASE FITTING		01

ASSY DEPTH WHEEL BOX

0501052627

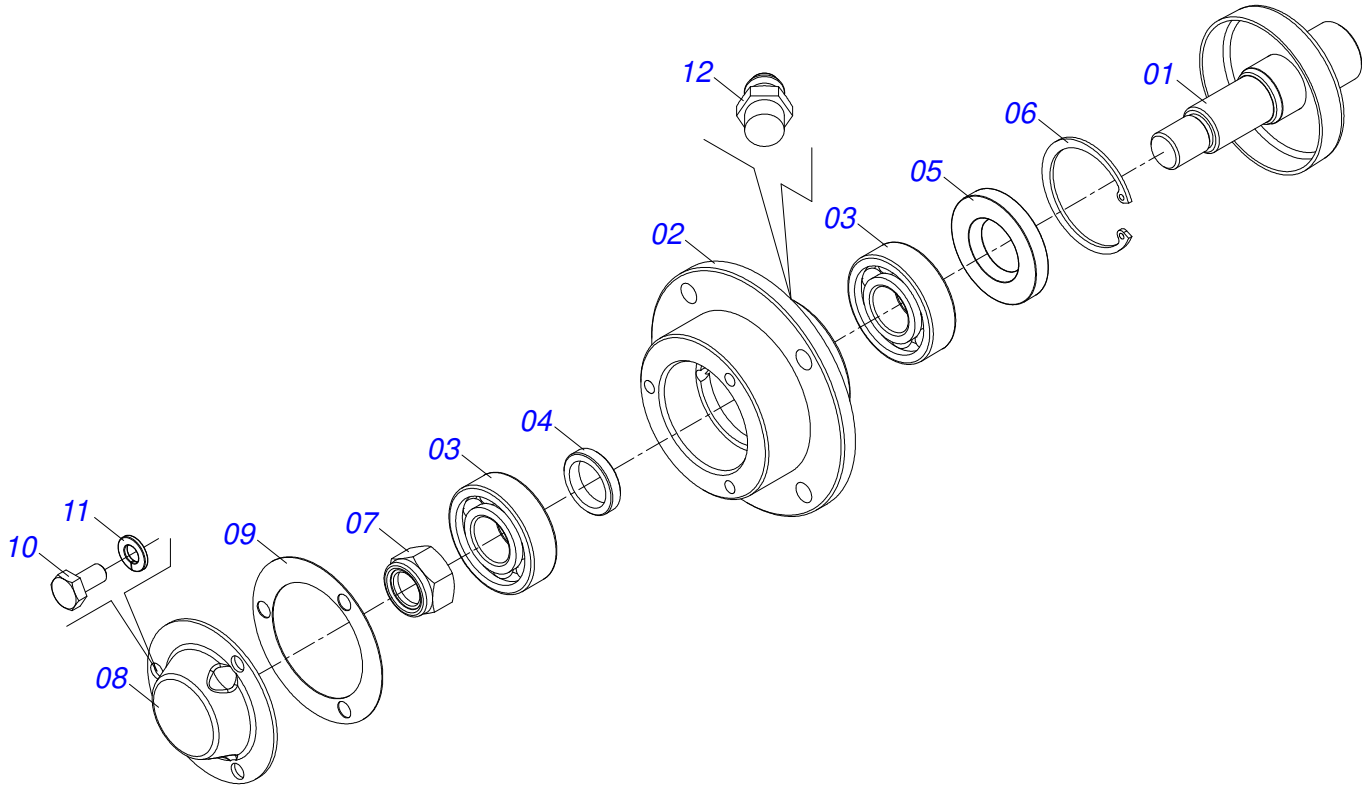

Item	Code	Description	See page	QT
01	0511060927	DEPTH CONTROL AXLE WITH DUST CLOAK		01
02	0502011907	DEPTH CONTROL WHEEL HUB		01
03	0503010269	6204 BALL BEARING		02
04	0501013636	SPACING SLEEVE		01
05	0503010689	SEAL 00763-BR		01
06	0503011105	SEAL RING		01
07	0503010878	5/8" SELF ALIGNING NUT		01
08	0521019178	COVER DEPTH		01
09	0503030757	2.9" X 2" X 0.02" JOINT		01
10	0503014729	1/4" UNF X 1/2" BOLT		03
11	0503011441	SPRING WASHER		03
12	0503010691	1/4" GREASE FITTING		01

DEPTH WHEELS REGULATOR ASSY

0501052297

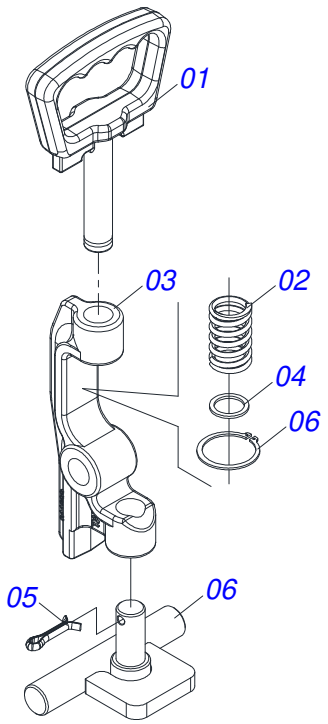

Item	Code	Description	See page	QT
01	0502011689	1/8" DEPTH CONTROL LEVER		01
02	0503030975	0.9" X 1.5" X 0.1" SPRING		01
03	0502011688	DEPTH CONTROL LEVER		01
04	0581019519	FLAT WASHER		01
05	0503010071	3/16" X 1" COTTERPIN		01
06	0511060699	DEPTH WHEEL STOP		01
07	0503019398	AXLE RETAINER RING		01

DEPTH BAND WITH ARMS

0501052538

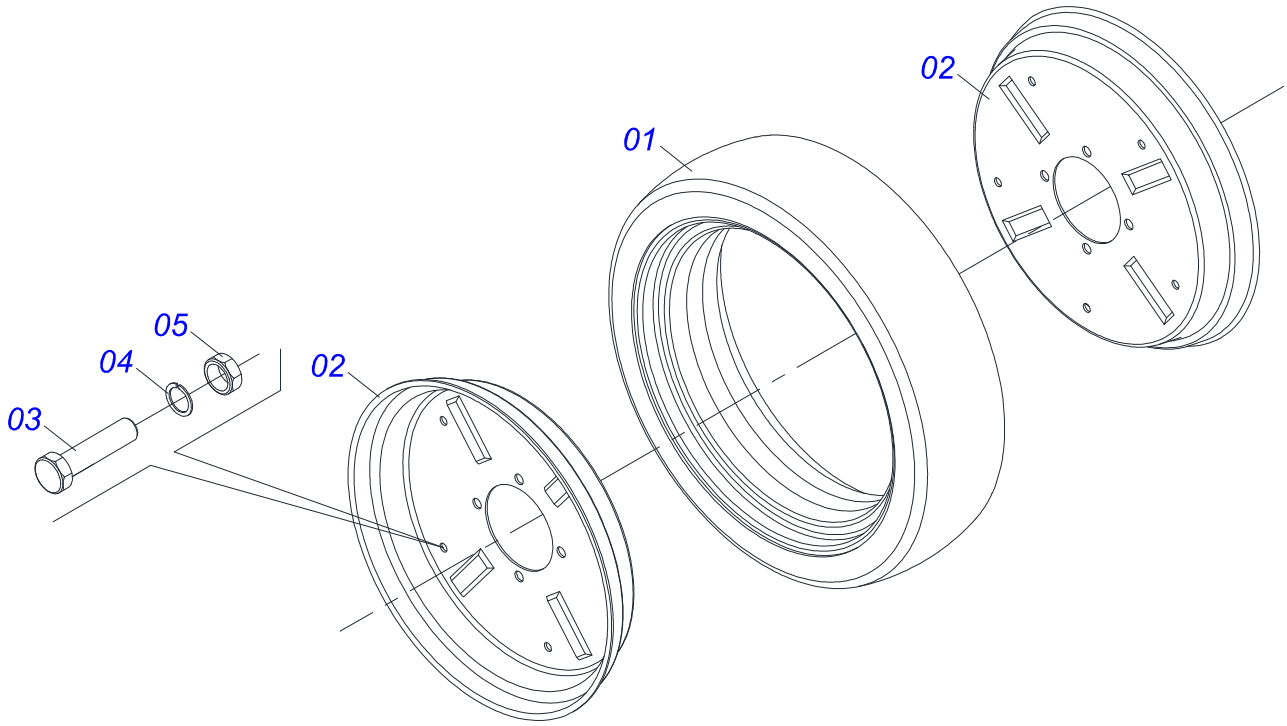

Item	Code	Description	See page	QT
01	0503030551	DEPTH CONTROL WHEEL RUBBER BAND		01
02	0521010832	RIM FLANGE		02
03	0503010298	1/4" X 1/2" BOLT		05
04	0503010143	1/4" SPRING WASHER		05
05	0503010144	1/4" NUT		05

COMPACT WHEEL RIGHT WITH BEARING

0511054333

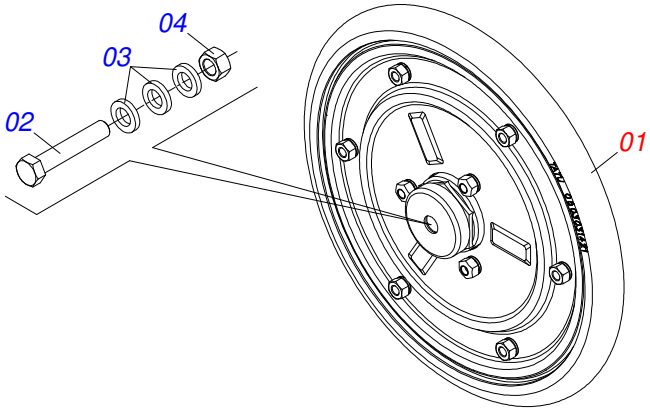

Item	Code	Description	See page	QT
01	0501052908	COMPACTOR WHEEL WITH BEARING	209	01
02	0503016449	1/2 X 4 BOLT		01
03	0521014508	FLAT WASHER		03
04	0503012136	NUT 1/2 NF		01

COMPACT WHEEL LEFT WITH BEARING

0511054334

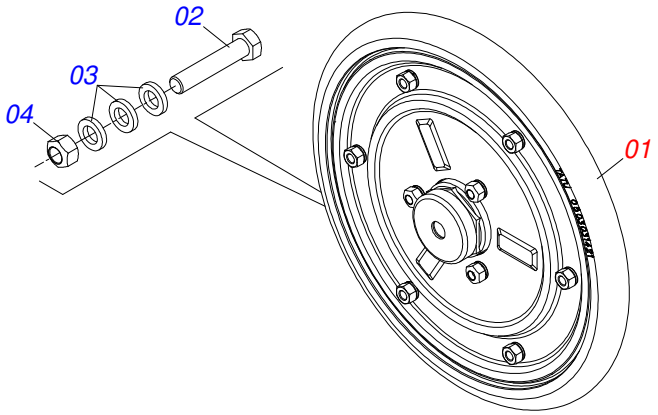

Item	Code	Description	See page	QT
01	0501052908	COMPACTOR WHEEL WITH BEARING	209	01
02	0503016863	BOLT 1/2 UNF X 4 CS R/ LEFT		01
03	0521014508	FLAT WASHER		03
04	0503016864	LH 1/2" LOCK NUT		01

COMPACTOR WHEEL WITH BEARING

0501052908

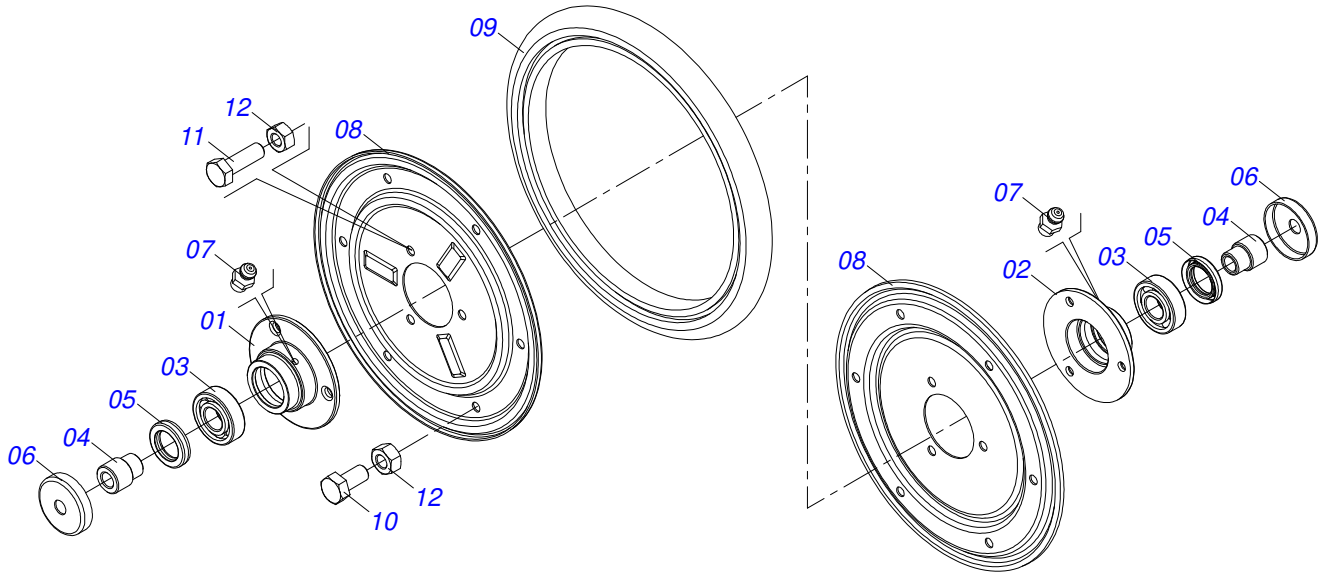

Item	Code	Description	See page	QT
01	0502011919	PRESS WHEEL HUB		01
02	0502011877	PRESS WHEEL HUB		01
03	0503010269	6204 BALL BEARING		02
04	0521018922	PRESS WHEEL PASSANG AXLE		02
05	0503012734	SEAL 01556 BR		02
06	0521018921	DUST CLOAK		02
07	0503010691	1/4" GREASE FITTING		01
08	0521018928	PRESS WHEEL RIM		02
09	0503031421	DEPTH CONTROL WHEEL RUBBER BAND		01
10	0503010011	5/16" X 1/2" BOLT		06
11	0503010358	5/16" X 5/8" BOLT		03
12	0503013816	5/16" LOCKNUT		03

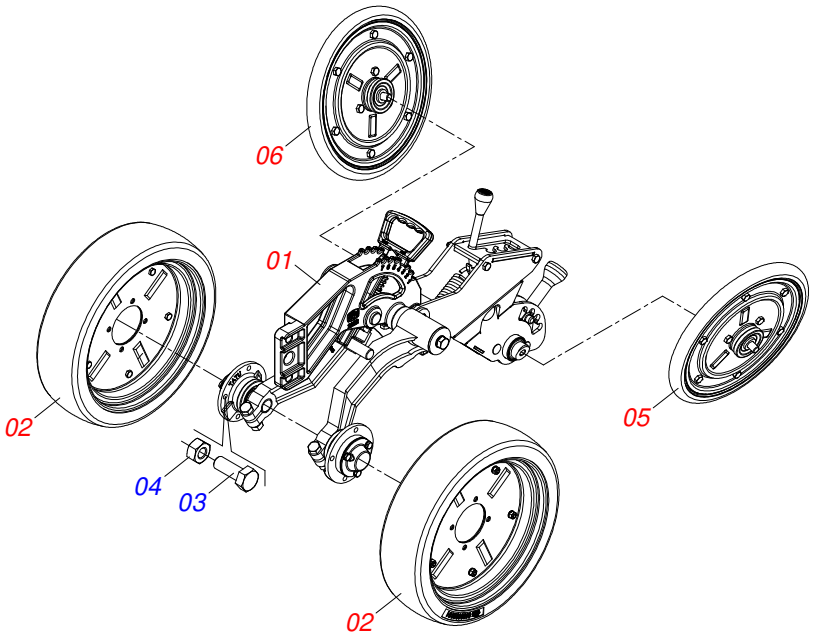

Item	Code	Description	See page	QT
01	0521054986	DEPTH CONTROL SEMI MOUNTED WITHOUT LUBRICATION	211	01
02	0501052538	DEPTH BAND WITH ARMS	206	02
03	0503010358	5/16" X 5/8" BOLT		08
04	0503013816	5/16" LOCKNUT		08
05	0521054990	LEFT COMPACTOR WHEEL	216	01
06	0521055017	RIGHT COMPACTOR WHEEL	215	01

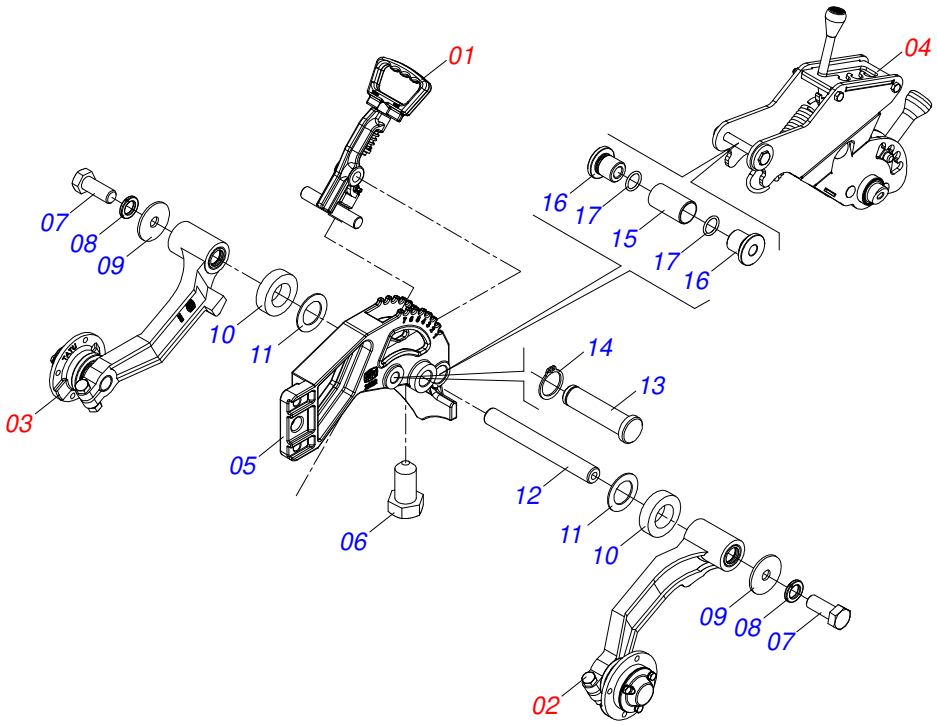

Item	Code	Description	See page	QT
01	0501052297	DEPTH WHEELS REGULATOR ASSY	205	01
02	0521054987	LEFT ARM WITH HUB WITHOUT LUBRIFICATION	213	01
03	0521054988	RIGHT ARM WITH HUB WITHOUT LUBRIFICATION	212	01
04	0521055033	SEMI-ASSEMBLED COMPACTOR BODY		01
05	0502012282	DEPTH CONTROL SUPPORT		01
06	0503034377	SCREEW 3/8 UNC X 3/4		01
07	0503010311	1/2" X 1-1/4" BOLT		02
08	0503010019	1/2" SPRING WASHER		02
09	0571017749	FLAT WASHER		02
10	0571015974	WASHER		02
11	0511015346	FLAT WASHER		02
12	0581011100	DEPTH WHEEL AXLE		01
13	0521019093	0.6" X 2.7" PIVOT SHAFT		01
14	0503010581	RING		01
15	0503019275	SLEEVE LUBRICATION SYSTEM		01
16	0581019473	ARTICULATED SLEEVE		02
17	0503010045	O'RING		02

RIGHT ARM WITH HUB WITHOUT LUBRIFICATION

0521054988

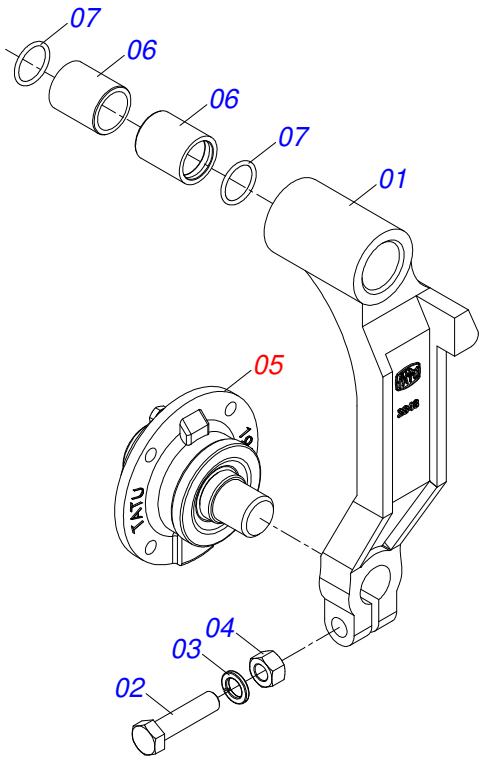

Item	Code	Description	See page	QT
01	0581019527	RIGHT ARM WHEEL CONTROL DEPTH		01
02	0503010740	BOLT 1/2 UNC X 2 CS G.5 ZN		01
03	0503010019	1/2" SPRING WASHER		01
04	0503010060	1/2" NUT		01
05	0521055016	CUBE DEPTH CONTROL WITHOUT LUBRICATION	214	01
06	0581019514	LUBRICANT SLEEVE		02
07	0503011109	2-119 N 3006-9B O'RING		02

LEFT ARM WITH HUB WITHOUT LUBRIFICATION

0521054987

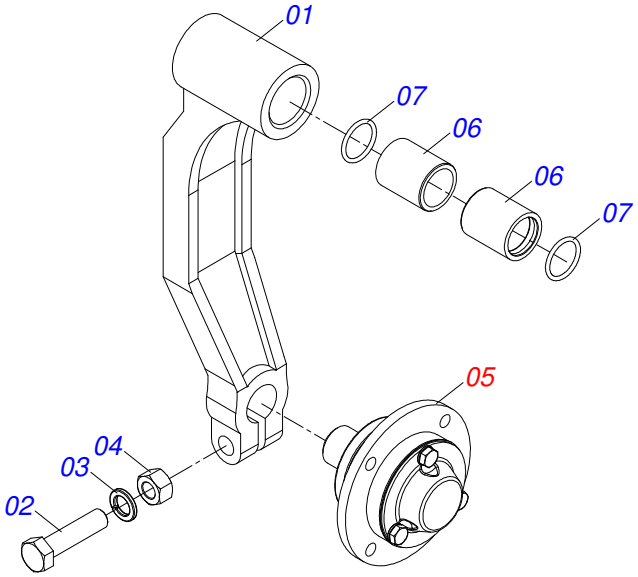

Item	Code	Description	See page	QT
01	0581019472	LEFT ARM WHEEL CONTROL DEPTH		01
02	0503010740	BOLT 1/2 UNC X 2 CS G.5 ZN		01
03	0503010019	1/2" SPRING WASHER		01
04	0503010060	1/2" NUT		01
05	0521055016	CUBE DEPTH CONTROL WITHOUT LUBRICATION	214	01
06	0581019514	LUBRICANT SLEEVE		02
07	0503011109	2-119 N 3006-9B O'RING		02

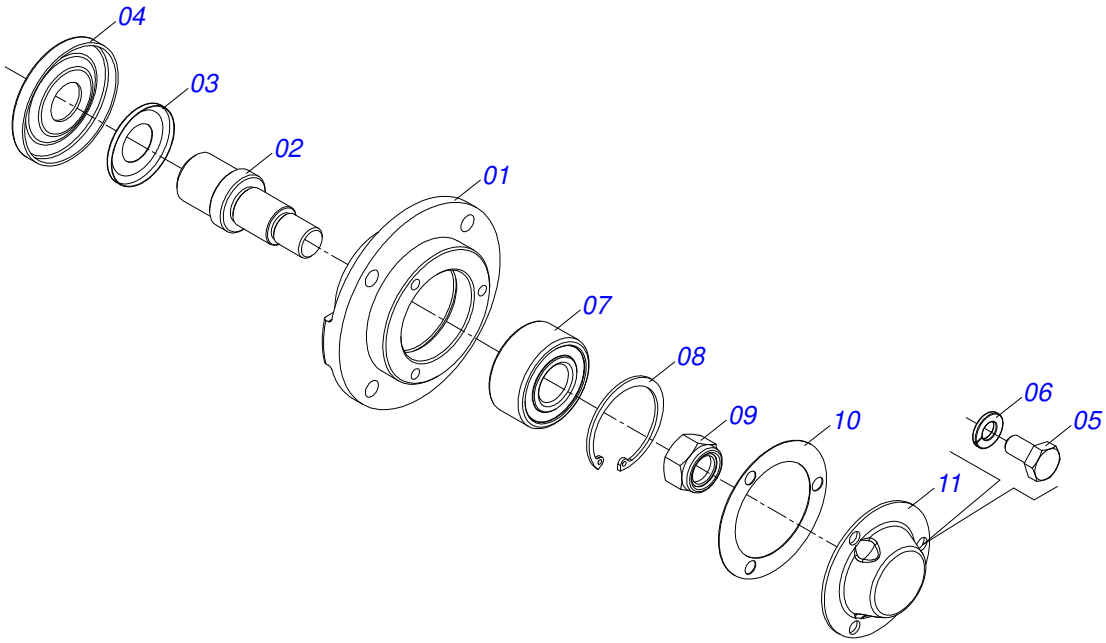

Item	Code	Description	See page	QT
01	0581019513	DEPTH WHEEL BOX		01
02	0581019515	AXIS		01
03	0503034055	CLAMPING RING		01
04	0581019168	POWDER DOOR Ø63,50 X 20,2 X 7,50		01
05	0503013758	1/4" X 1-1/2" BOLT		03
06	0503010143	1/4" SPRING WASHER		03
07	0503019342	ROLLER BEARING		01
08	0503011105	SEAL RING		01
09	0503010878	5/8" SELF ALIGNING NUT		01
10	0503030757	2.9" X 2" X 0.02" JOINT		01
11	0521019178	COVER DEPTH		01

RIGHT COMPACTOR WHEEL

0521055017

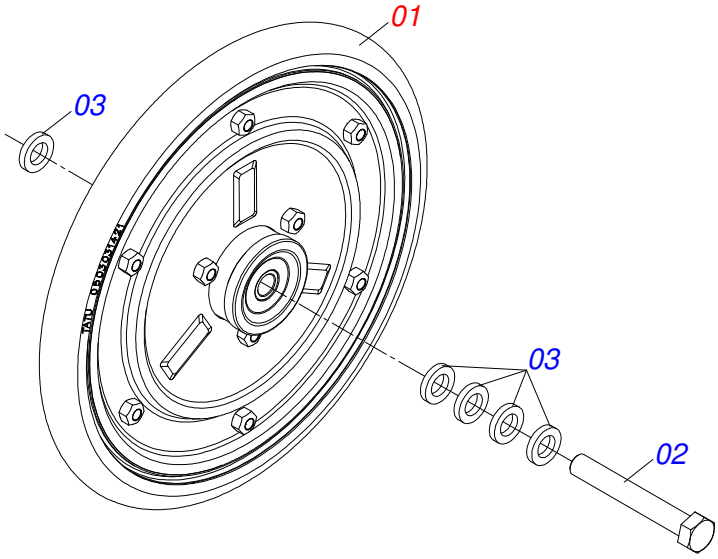

Item	Code	Description	See page	QT
01	0521054989	RUBBER WHEEL ASSEMBLY WITHOUT LUBRICATION	217	01
02	0503010752	1/2" X 3.1/2" BOLT		01
03	0521014508	FLAT WASHER		05

LEFT COMPACTOR WHEEL

0521054990

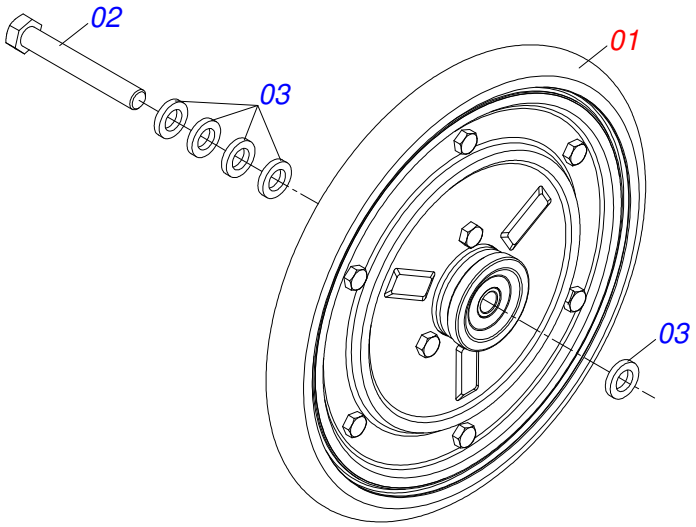

Item	Code	Description	See page	QT
01	0521054989	RUBBER WHEEL ASSEMBLY WITHOUT LUBRICATION	217	01
02	0503013739	1/2" X 1" BOLT		01
03	0521014508	FLAT WASHER		05

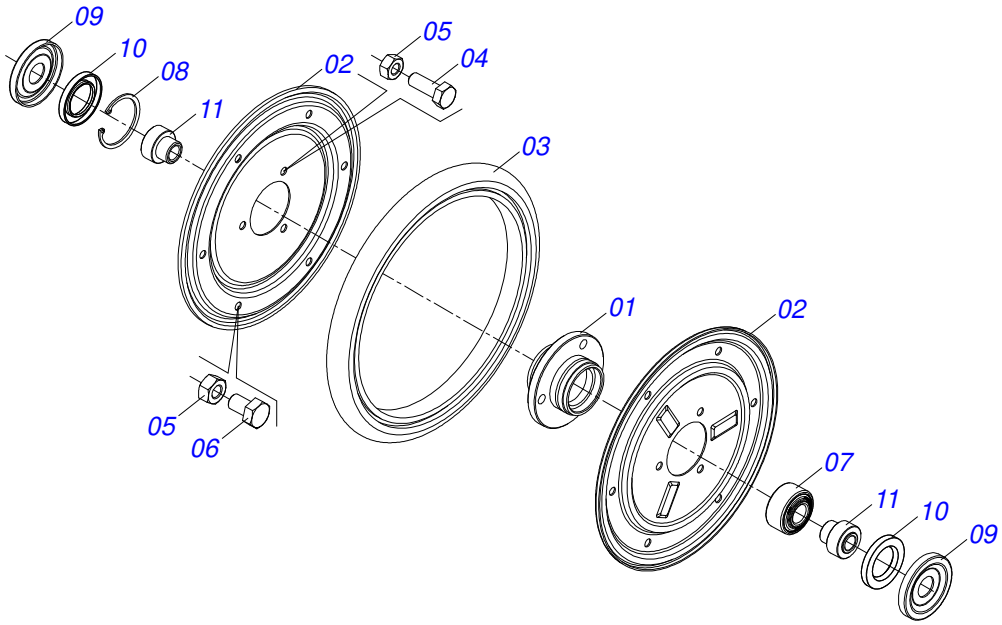

Item	Code	Description	See page	QT
01	0502012894	CUBE WHEELS		01
02	0521018928	PRESS WHEEL RIM		02
03	0503031421	DEPTH CONTROL WHEEL RUBBER BAND		01
04	0503010358	5/16" X 5/8" BOLT		03
05	0503013816	5/16" LOCKNUT		09
06	0503010011	5/16" X 1/2" BOLT		06
07	0503019342	ROLLER BEARING		01
08	0503011105	SEAL RING		01
09	0511011927	DUST CLOAK		02
10	0503013848	5072-BR SEAL		02
11	0581019533	AXIS		02

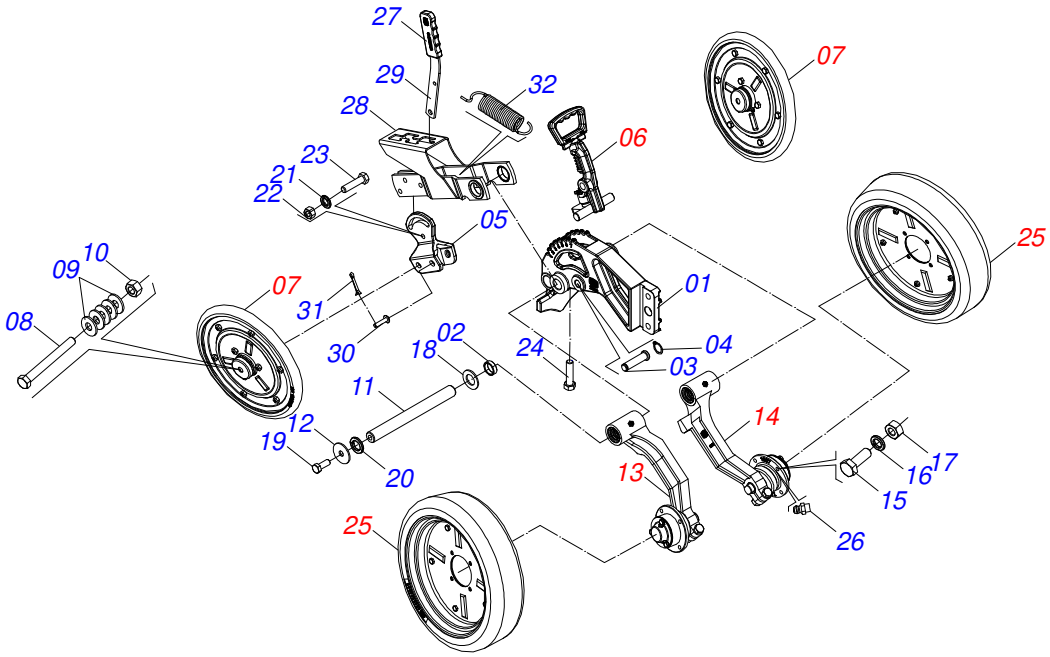

Item	Code	Description	See page	QT
01	0502012282	DEPTH CONTROL SUPPORT		01
02	0521010480	1" X 1.2" X 0.4" ARTICULAT SLEEVE		02
03	0521019093	0.6" X 2.7" PIVOT SHAFT		01
04	0503010581	RING		01
05	1902012116	PRESS WHEEL ADJUSTER		01
06	0501052297	DEPTH WHEELS REGULATOR ASSY	205	01
07	0501052908	COMPACTOR WHEEL WITH BEARING	209	02
08	0503010706	BOLT 1/2 UNC X 4.1/2 C S G.5 ZN		02
09	0521014508	FLAT WASHER		10
10	0503011336	1/2" HEX SELF ADJUSTING NUT		02
11	0581011100	DEPTH WHEEL AXLE		01
12	0571017749	FLAT WASHER		02
13	0521056314	LEFT ARM WHEEL DEPTH WITH CUBE CPERA	220	01
14	0521056313	RIGHT ARM WHEEL DEPTH WITH CUBE CPERA	219	01
15	0503010358	5/16" X 5/8" BOLT		08
16	0503010179	LOCK WASHER		08
17	0503013816	5/16" LOCKNUT		08
18	0501011445	FLAT WASHER		02
19	0503010311	1/2" X 1-1/4" BOLT		02
20	0503010019	1/2" SPRING WASHER		02
21	0503010025	3/8" SPRING WASHER		02
22	0503010026	3/8" NUT		02
23	0503010849	3/8" X 1-1/2" BOLT		02
24	0503010256	3/8" X 3/4" BOLT		01
25	0511055819	DEPTH BAND WITH RIM	222	02
26	0503010691	1/4" GREASE FITTING		02
27	0503033942	COVER REGULATORY WHEEL		01
28	0521064073	REGULACION WHEEL COMPACTOR		01
29	0541016906	PRESS WHEELS REGULATOR BODY		01
30	0521010539	0.3" X 1.2" COUPLING SHAFT		01
31	0503010140	1/8" X 3/4" COTTERPIN		01

Item	Code	Description	See page	QT
32	0503030805	1.6" X 6" X 0.2 TRACTION SPRING		01

RIGHT ARM WHEEL DEPTH WITH CUBE CPERA

0521056313

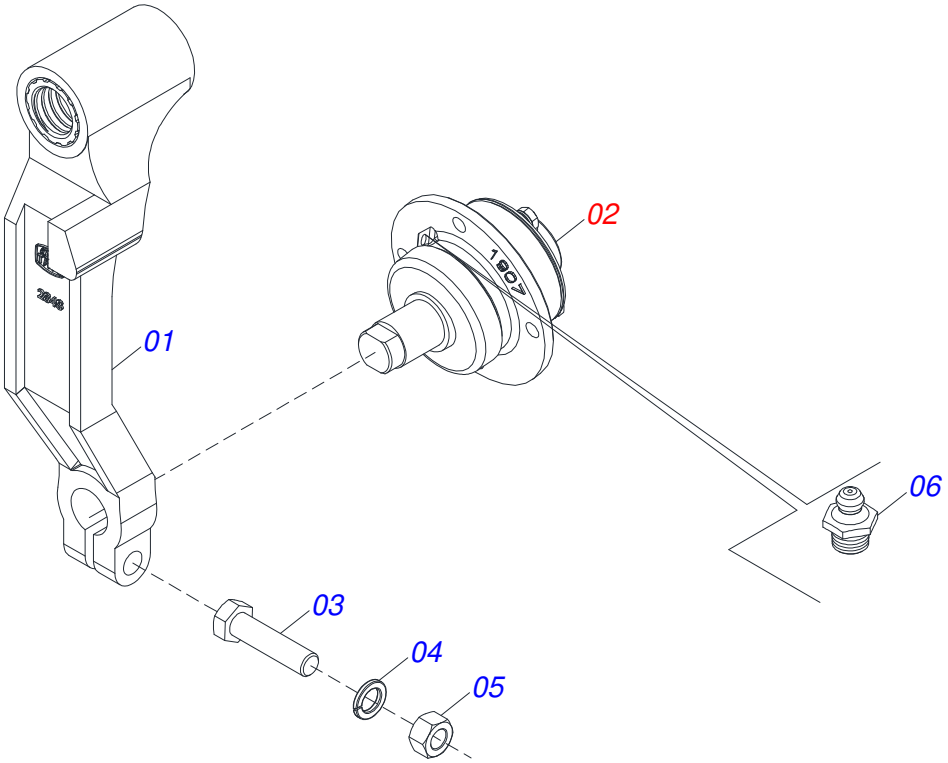

Item	Code	Description	See page	QT
01	0501110833	DEPTH CONTROL RIGHT ARM		01
02	0521056316	DEPTH WHEEL BOX WITH COMPLETE ANGLE ADJUSTING AXLE	221	01
03	0503010740	BOLT 1/2 UNC X 2 CS G.5 ZN		01
04	0503011440	SPRING WASHER		01
05	0503010060	1/2" NUT		01
06	0503010002	1800 GREASE FITTING		01

LEFT ARM WHEEL DEPTH WITH CUBE CPERA

0521056314

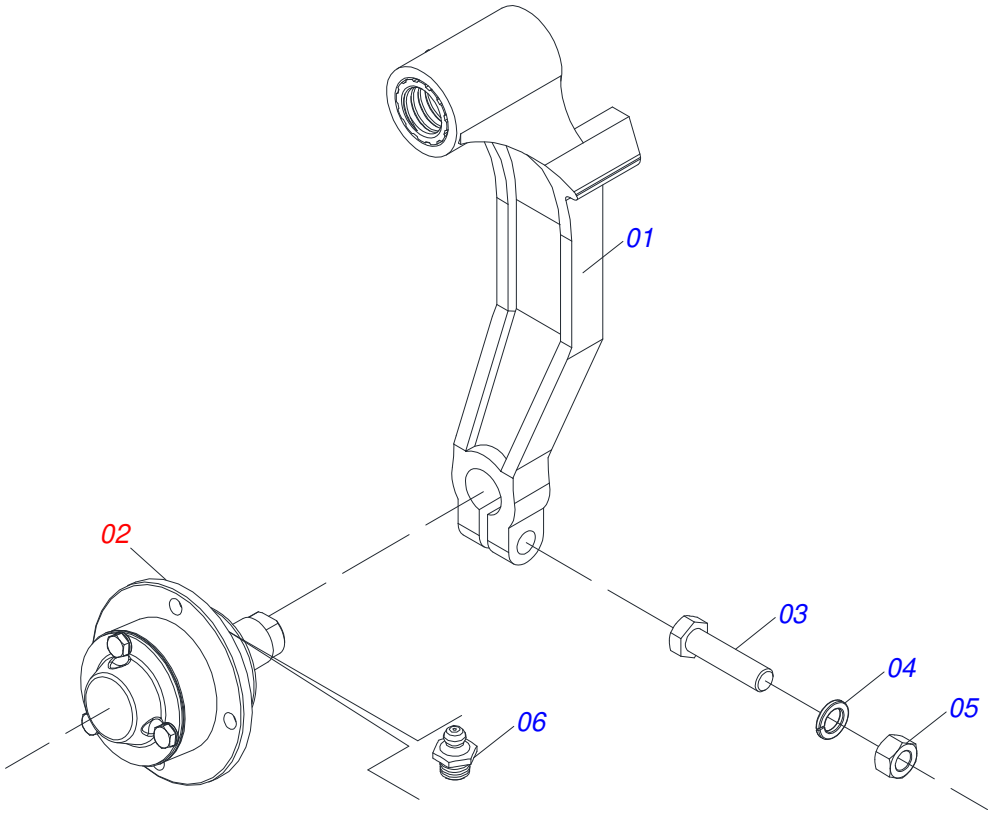

Item	Code	Description	See page	QT
01	0501110834	LH ARM		01
02	0521056316	DEPTH WHEEL BOX WITH COMPLETE ANGLE ADJUSTING AXLE	221	01
03	0503010740	BOLT 1/2 UNC X 2 CS G.5 ZN		01
04	0503011440	SPRING WASHER		01
05	0503010060	1/2" NUT		01
06	0503010002	1800 GREASE FITTING		01

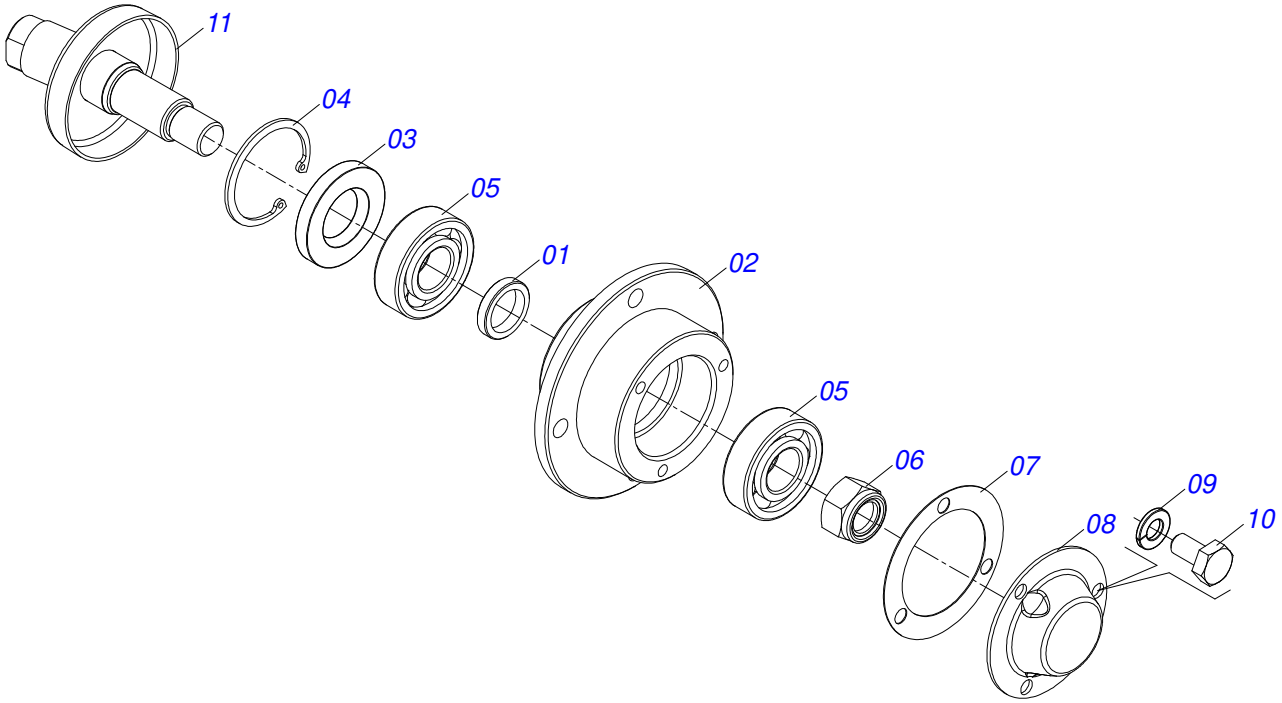

Item	Code	Description	See page	QT
01	0501013636	SPACING SLEEVE		01
02	0502011907	DEPTH CONTROL WHEEL HUB		01
03	0503010689	SEAL 00763-BR		01
04	0503011105	SEAL RING		01
05	0503010269	6204 BALL BEARING		02
06	0503010878	5/8" SELF ALIGNING NUT		01
07	0503030757	2.9" X 2" X 0.02" JOINT		01
08	0521019178	COVER DEPTH		01
09	0503010143	1/4" SPRING WASHER		03
10	0503014729	1/4" UNF X 1/2" BOLT		03
11	0521060071	DEPTH CONTROL AXLE		01

DEPTH BAND WITH RIM

0511055819

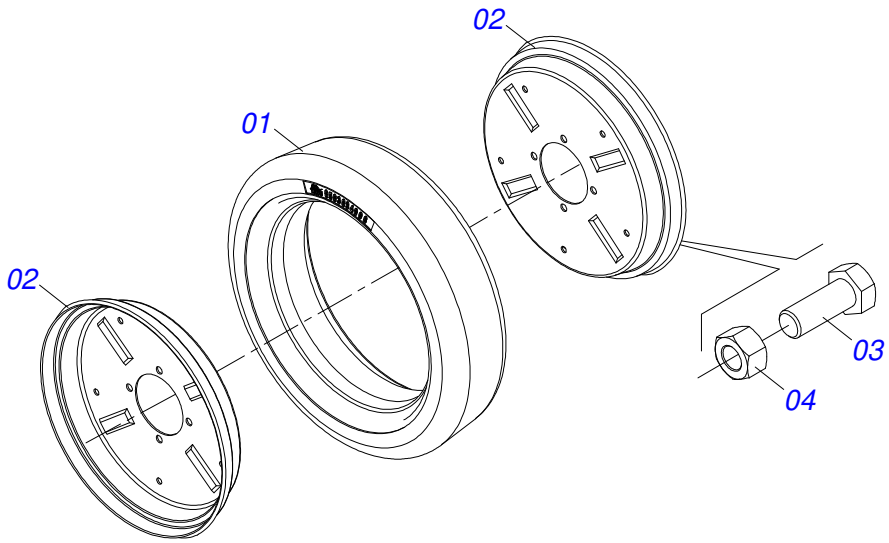

Item	Code	Description	See page	QT
01	0503034008	DEPTH CONTROL		01
02	0521010832	RIM FLANGE		02
03	0503013758	1/4" X 1-1/2" BOLT		05
04	0503013814	1/4" NC LOCKNUT		05

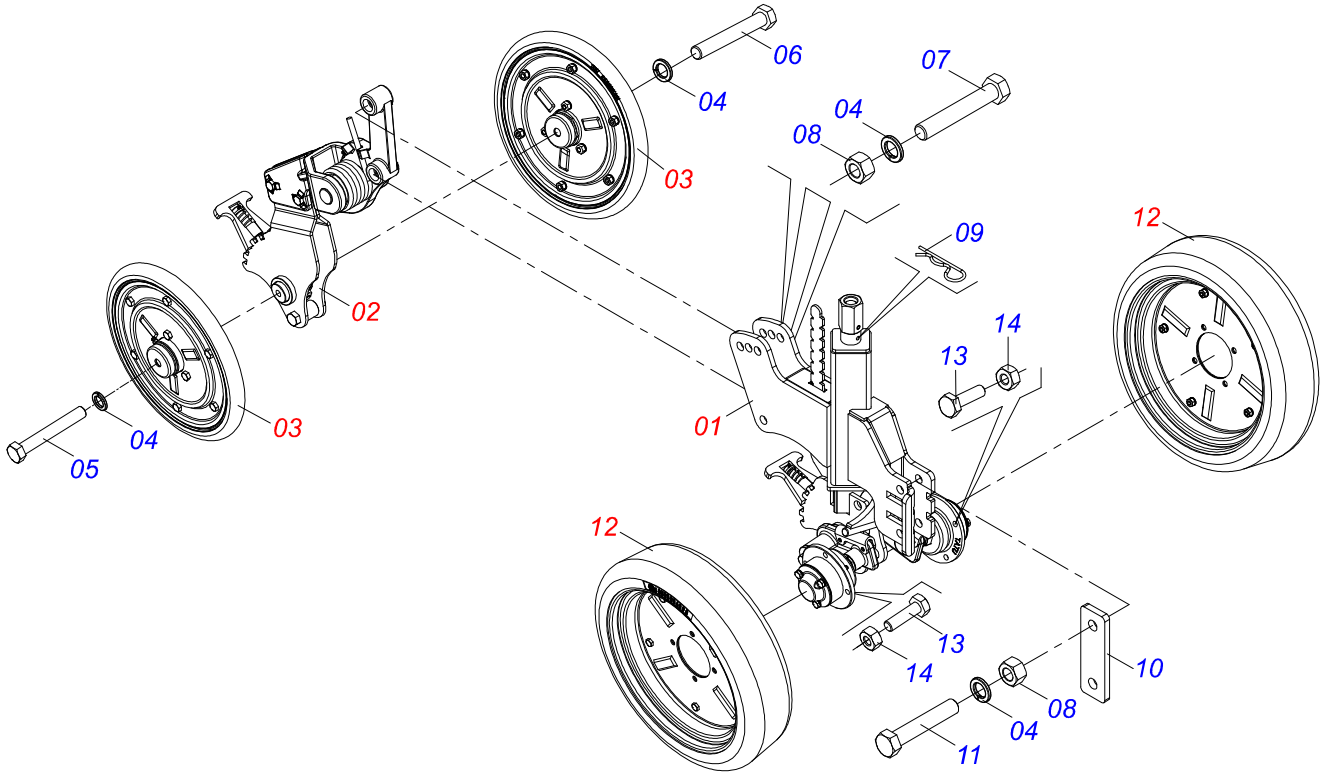

Item	Code	Description	See page	QT
01	0511052971	SEMI-ASSEMBLED DEPTH CONTROL WITH THREAD	224	01
02	0511052970	SYSTEM COMPACTOR V SEMI MOUNTED	230	01
03	0501052908	COMPACTOR WHEEL WITH BEARING	209	02
04	0503010019	1/2" SPRING WASHER		06
05	0503010752	1/2" X 3.1/2" BOLT		01
06	0503013739	1/2" X 1" BOLT		01
07	0503010479	BOLT		02
08	0503010060	1/2" NUT		04
09	0503030012	HITCH PIN CLIP		01
10	0571013222	FIXING CHOCK		01
11	0503010741	1/2" X 2-3/4" BOLT		02
12	0511055819	DEPTH BAND WITH RIM	222	02
13	0503016506	5/16 UNC X 3/4 C S G.5 ZN BOLT		08
14	0503013816	5/16" LOCKNUT		08

SEMI-ASSEMBLED DEPTH CONTROL WITH THREAD

0511052971

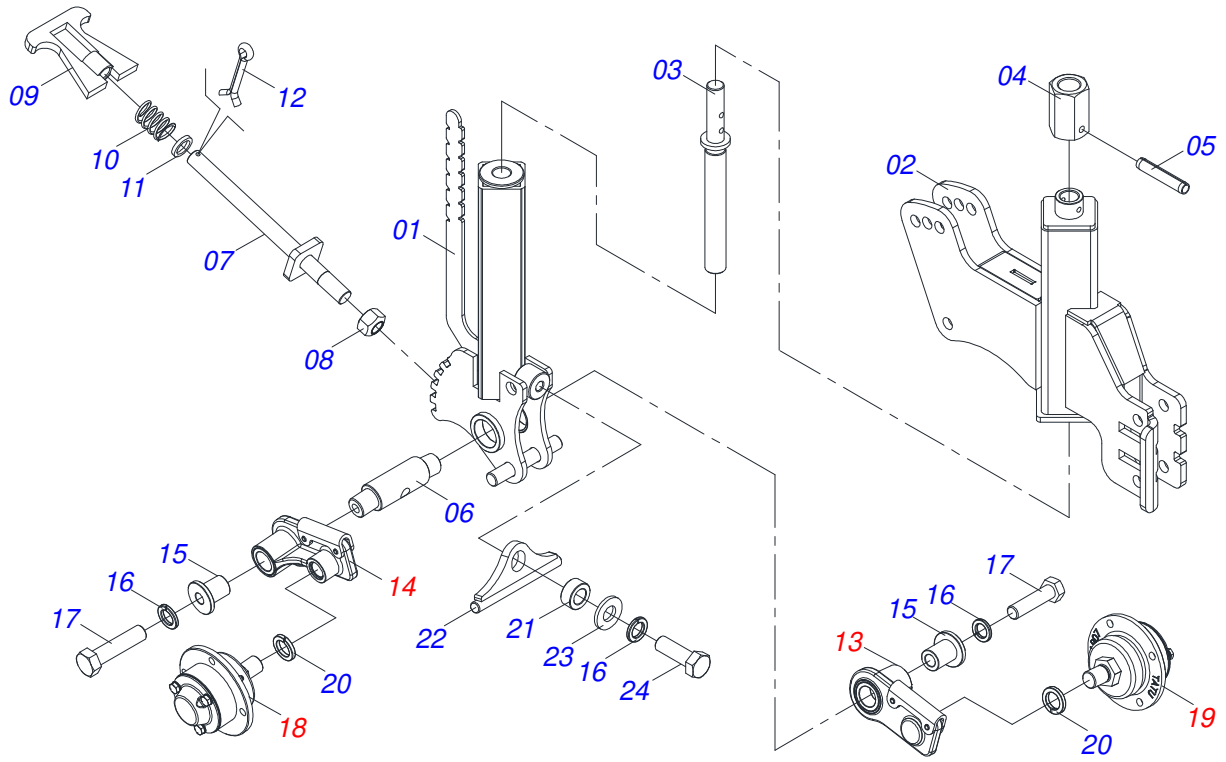

Item	Code	Description	See page	QT
01	0521063808	DEPTH CONTROL INNER COLUMN CONTROL WITH SCREW		01
02	0521063809	DEPTH CONTROL EXTERNAL COLUMN CONTROL WITH SCREW		01
03	0571013194	REGULATOR SPINDLE		01
04	0551010616	ROD HEX		01
05	0503010683	0,2" X 1,2" SPRING PIN		01
06	0571013202	COVERING WHEEL REGULATOR AXLE		01
07	0521063812	REGULATOR LEVER ALXE		01
08	0503011336	1/2" HEX SELF ADJUSTING NUT		01
09	0511065308	LOCK REGULATOR		01
10	0503032035	0.7" X 1.2" X 1" COMPRESSION SPRING		01
11	0541011627	FLAT WASHER		01
12	0503010140	1/8" X 3/4" COTTERPIN		01
13	0511059325	LEFT ARM COVERED WHEEL ASSEMBLED	226	01
14	0511059324	RIGHT ARM COVERED WHEEL ASSEMBLED	225	01
15	0571014709	SLEEVE LOCK CONTROL ARM		02
16	0503011440	SPRING WASHER		03
17	0503819099	BOLT		02
18	0511051546	CUBE RIGHT CONTROL DEPTH	227	01
19	0511051547	LEFT CUBE CONTROL DEPTH	228	01
20	0503011442	3/4" SPRING WASHER		02
21	0571013189	SLEEVE SUPPORT BEATER		01
22	0521063813	WHEEL PRESS BEATER		01
23	0501010937	13,50 X 28 X 3,00 FLAT WASHER		01
24	0503010920	1/2" X 1.1/2" BOLT		01

RIGHT ARM COVERED WHEEL ASSEMBLED

0511059324

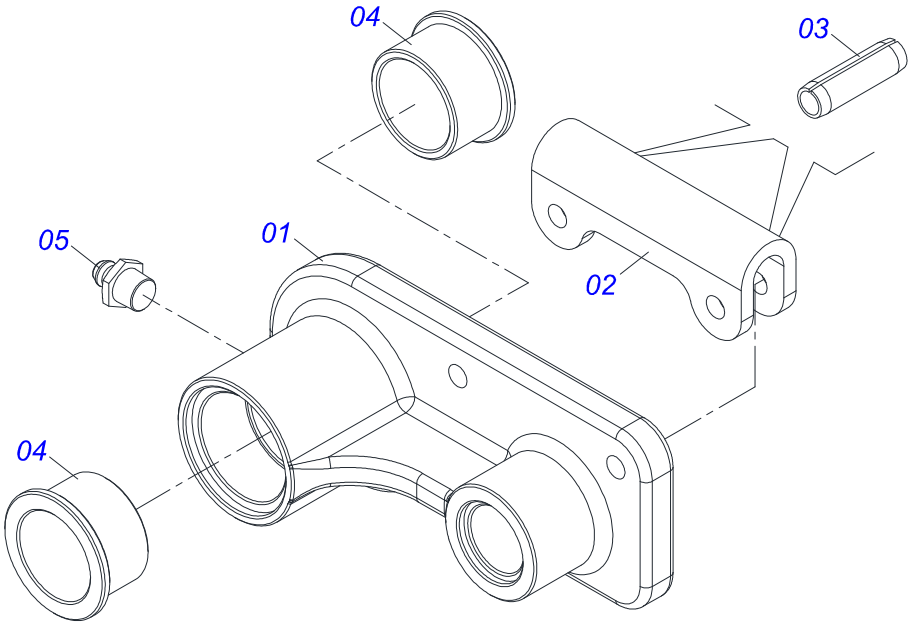

Item	Code	Description	See page	QT
01	0502012843	RIGHT WHEEL ARM		01
02	0581011340	ARM COVER		01
03	0503011402	0.2" X 0.8" SPRING PIN		02
04	0503034383	COVERING WHEEL ARM SUPPORT SLEEVE		02
05	0503010002	1800 GREASE FITTING		01

LEFT ARM COVERED WHEEL ASSEMBLED

0511059325

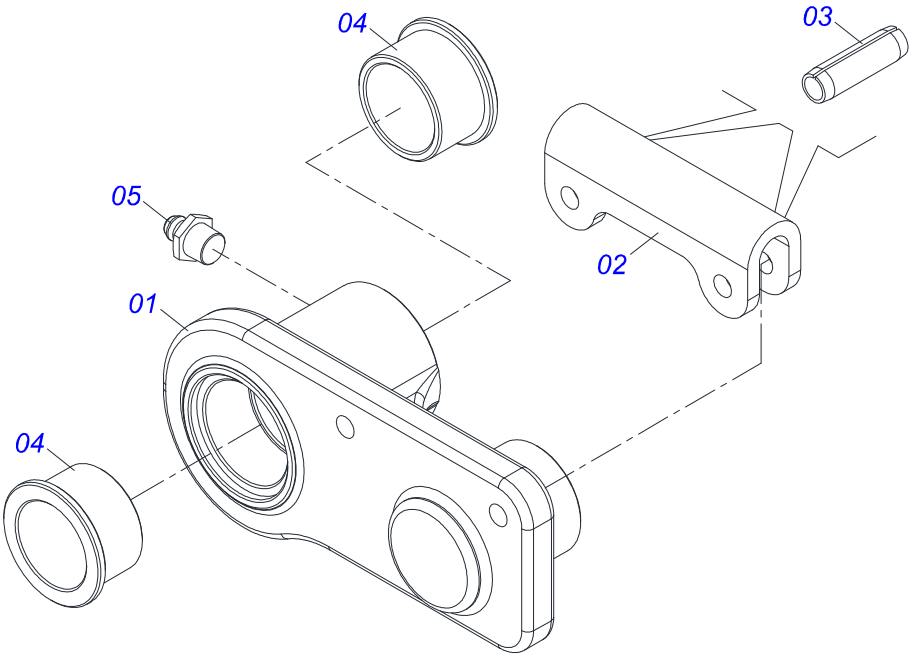

Item	Code	Description	See page	QT
01	0502012844	LEFT ARM WHEELS		01
02	0581011340	ARM COVER		01
03	0503011402	0.2" X 0.8" SPRING PIN		02
04	0503034383	COVERING WHEEL ARM SUPPORT SLEEVE		02
05	0503010002	1800 GREASE FITTING		01

CUBE RIGHT CONTROL DEPTH

0511051546

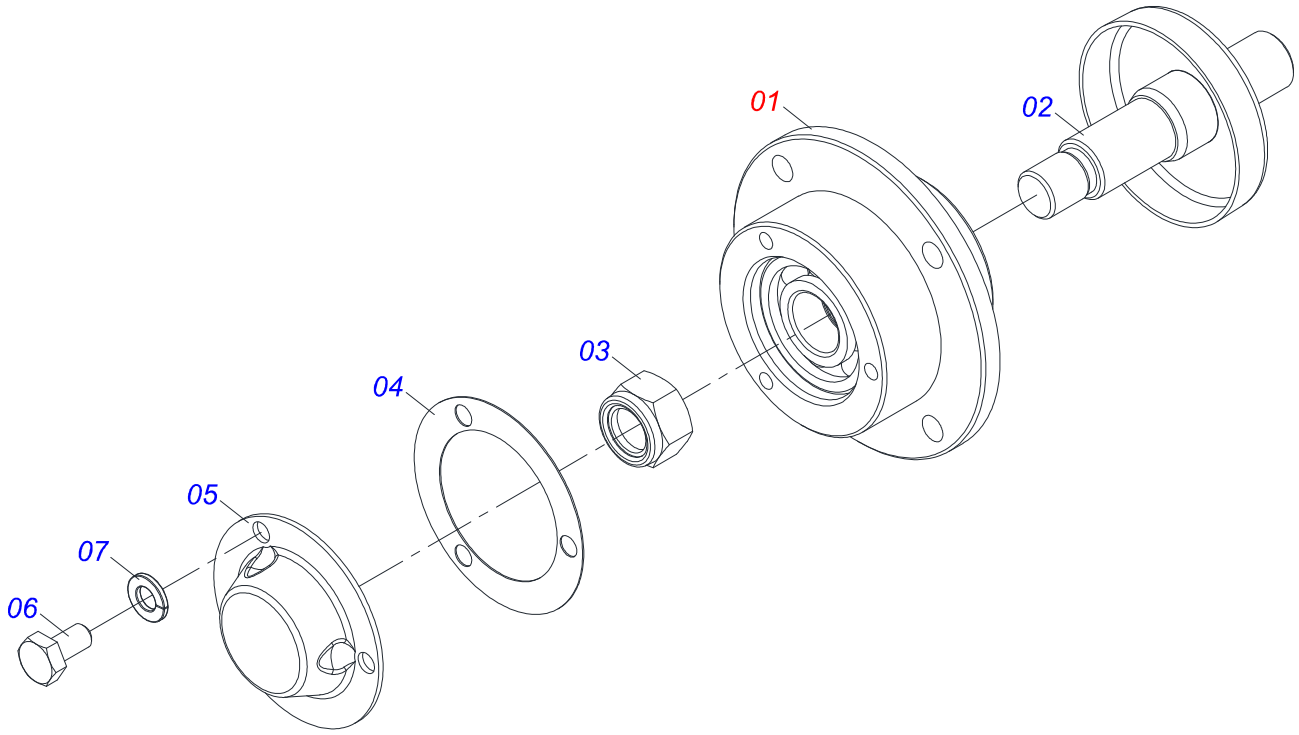

Item	Code	Description	See page	QT
01	0511051583	SEMI-ASSEMBLED DEPTH WHEEL HUB	229	01
02	0511066638	AXLE WHEEL RIGHT DEPTH WITH DOOR DUST		01
03	0503010878	5/8" SELF ALIGNING NUT		01
04	0503030757	2.9" X 2" X 0.02" JOINT		01
05	0521019178	COVER DEPTH		01
06	0503014729	1/4" UNF X 1/2" BOLT		03
07	0503011441	SPRING WASHER		03

LEFT CUBE CONTROL DEPTH

0511051547

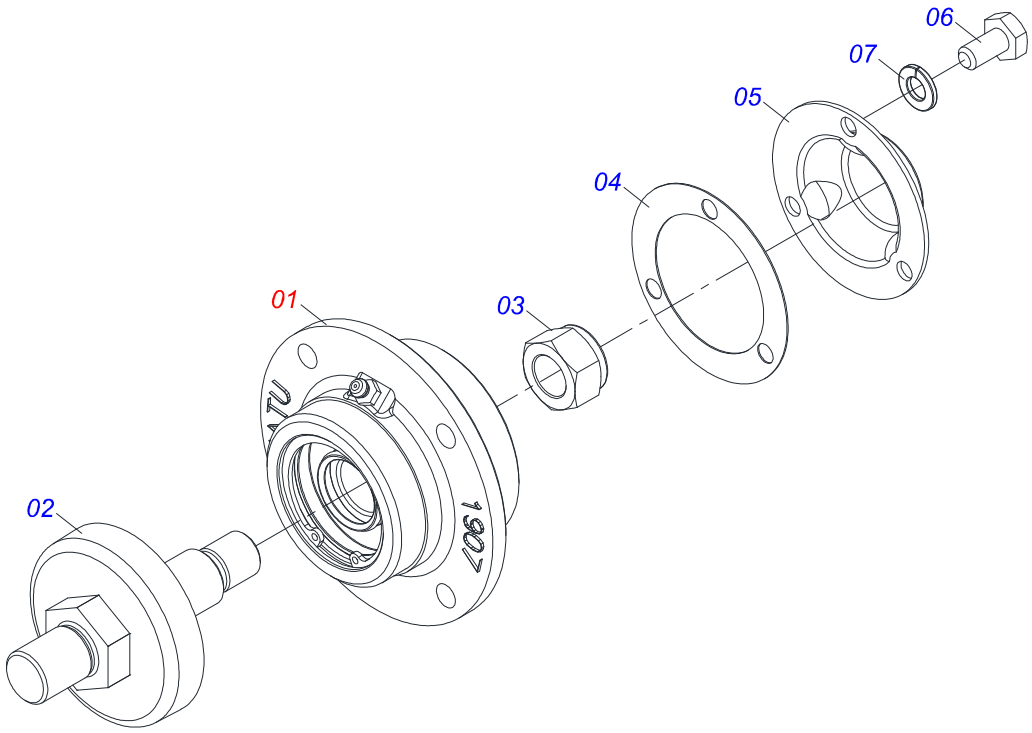

Item	Code	Description	See page	QT
01	0511051583	SEMI-ASSEMBLED DEPTH WHEEL HUB	229	01
02	0511066637	AXLE WHEEL LEFT DEPTH WITH DOOR DUST		01
03	0503010878	5/8" SELF ALIGNING NUT		01
04	0503030757	2.9" X 2" X 0.02" JOINT		01
05	0521019178	COVER DEPTH		01
06	0503014729	1/4" UNF X 1/2" BOLT		03
07	0503011441	SPRING WASHER		03

SEMI-ASSEMBLED DEPTH WHEEL HUB

0511051583

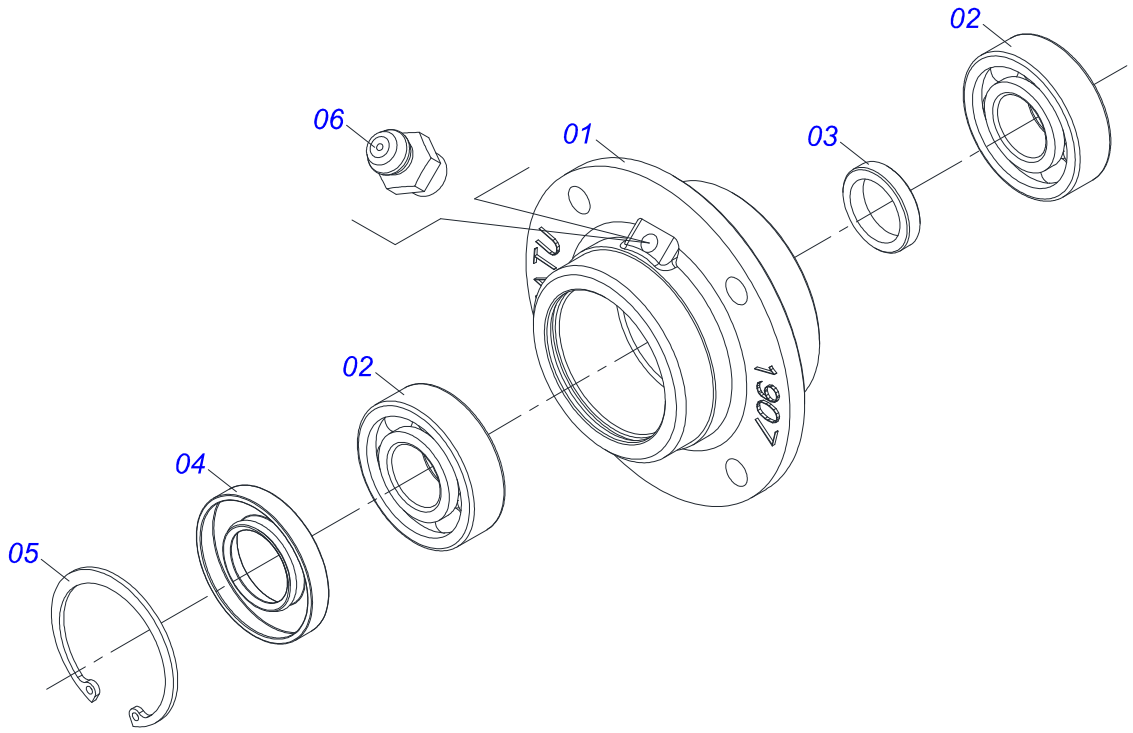

Item	Code	Description	See page	QT
01	0502011907	DEPTH CONTROL WHEEL HUB		01
02	0503010269	6204 BALL BEARING		02
03	0501013636	SPACING SLEEVE		01
04	0503010689	SEAL 00763-BR		01
05	0503011105	SEAL RING		01
06	0503010691	1/4" GREASE FITTING		01

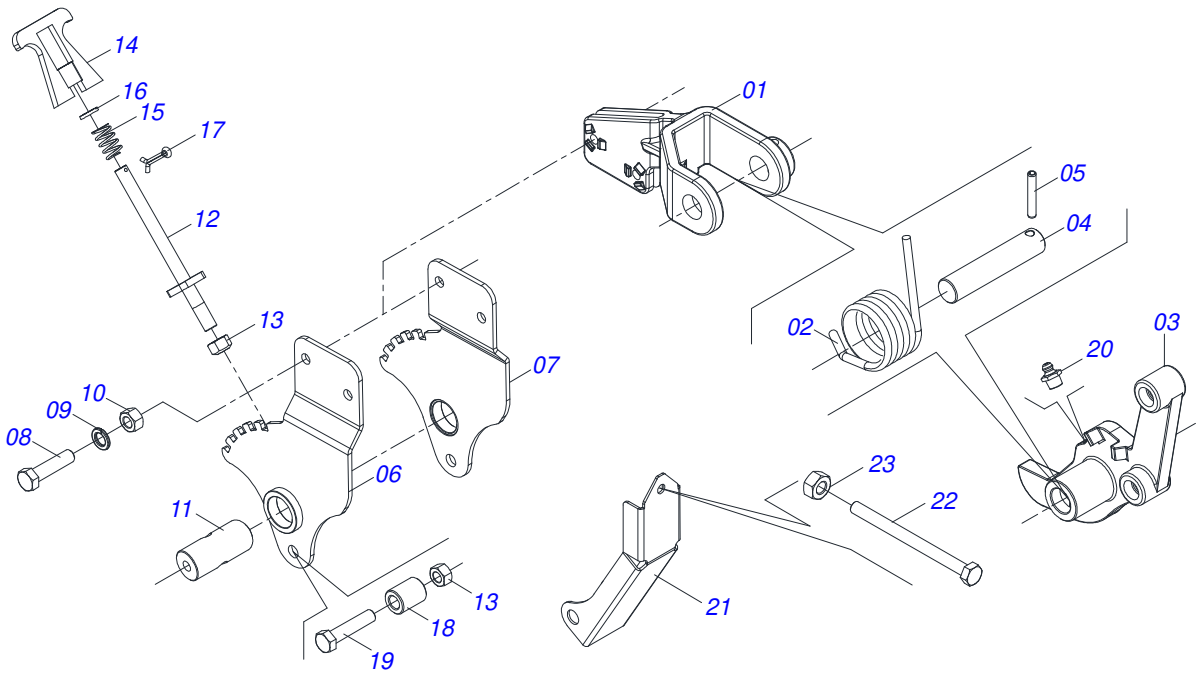

Item	Code	Description	See page	QT
01	0502012850	PRESS WHEELS ARM		01
02	0503030883	RIGHT TORSION SPRING		01
03	0502011066	PRESS WHEELS ARM SUPPORT		01
04	0531017415	1" X 4.72" AXLE JOINT		01
05	0503010839	03"X 0.6" SPRING PIN		01
06	0521063841	REGULATOR RIGHT COMPACTOR		01
07	0521063842	REGULATOR LEFT COMPACTOR		01
08	0503811404	BOLT		02
09	0503011443	3/8" SPRING WASHER		02
10	0503010026	3/8" NUT		02
11	0571013295	ALXE REGULATOR COMPACTOR		01
12	0521063812	REGULATOR LEVER ALXE		01
13	0503011336	1/2" HEX SELF ADJUSTING NUT		02
14	0511065308	LOCK REGULATOR		01
15	0503032035	0.7" X 1.2" X 1" COMPRESSION SPRING		01
16	0541011627	FLAT WASHER		01
17	0503010140	1/8" X 3/4" COTTERPIN		01
18	0571013293	SLEEVE LOCK COMPACTOR V CONTROL WITH SCREW		01
19	0503811172	BOLT		01
20	0503010002	1800 GREASE FITTING		01
21	0581013744	PROTECTION COVER - CPRA		01
22	0503813096	BOLT		01
23	0503013816	5/16" LOCKNUT		0

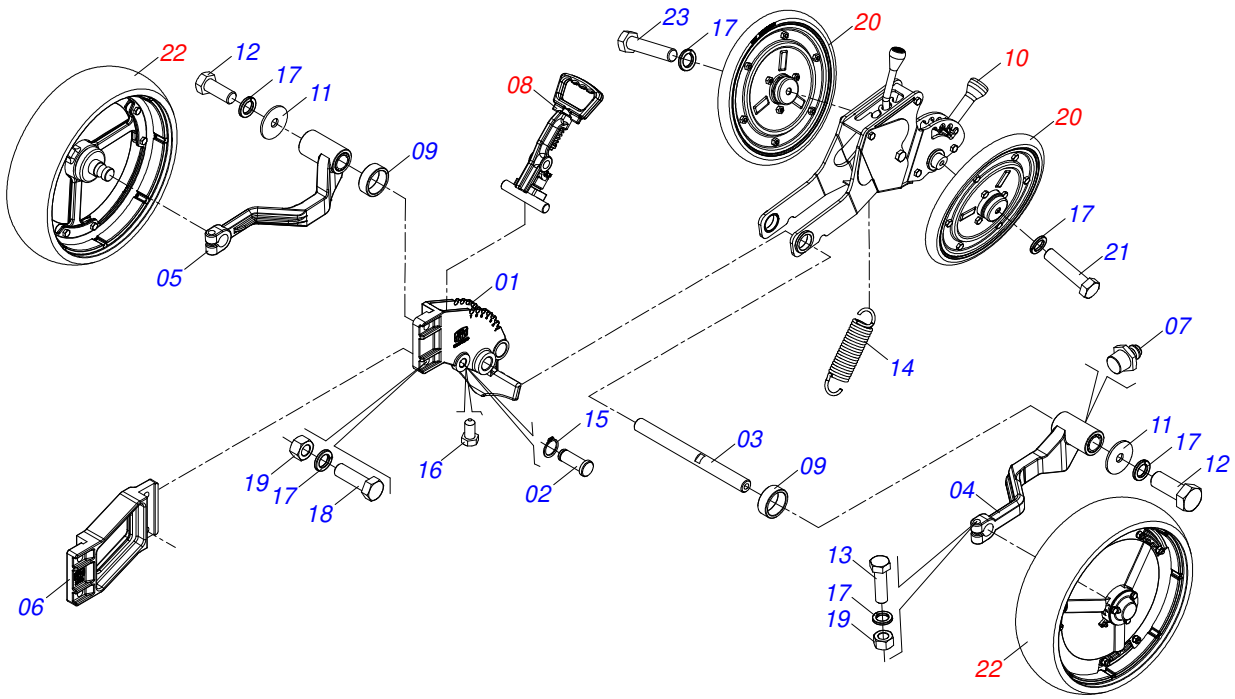

Item	Code	Description	See page	QT
01	0502012283	DEPTH CONTROL SUPPORT		01
02	0521019093	0.6" X 2.7" PIVOT SHAFT		01
03	0581014858	DEPTH WHEEL AXLE		01
04	0501110720	ARM LEFT		01
05	0501110719	DEPTH CONTROL RIGHT ARM		01
06	0502012663	EXTENSION		01
07	0503010002	1800 GREASE FITTING		02
08	0501056769	DEPTH WHEELS REGULATOR ASSY	232	01
09	0503034793	ARTICULATION SLEEVE		02
10	0521051423	COMPACTOR SUPPORT	233	01
11	0571017749	FLAT WASHER		02
12	0503010311	1/2" X 1-1/4" BOLT		02
13	0503016453	1/2" X 2.1/2 BOLT		02
14	0503034817	SPRING		01
15	0503010581	RING		01
16	0503034377	SCREEW 3/8 UNC X 3/4		01
17	0503010019	1/2" SPRING WASHER		08
18	0503010740	BOLT 1/2 UNC X 2 CS G.5 ZN		02
19	0503010060	1/2" NUT		04
20	0501052908	COMPACTOR WHEEL WITH BEARING	209	02
21	0503013739	1/2" X 1" BOLT		01
22	0511050077	WHEEL STRIPED	234	02
23	0503010752	1/2" X 3.1/2" BOLT		01

DEPTH WHEELS REGULATOR ASSY

0501056769

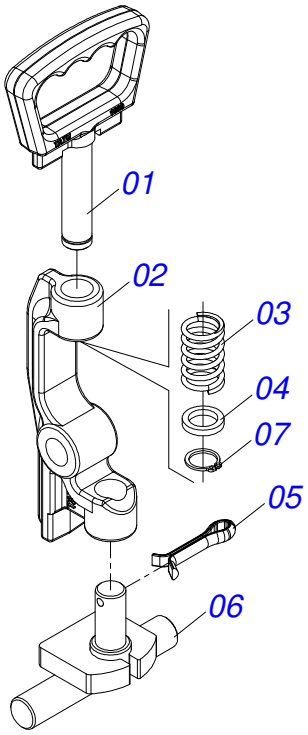

Item	Code	Description	See page	QT
01	0502011689	1/8" DEPTH CONTROL LEVER		01
02	0502011688	DEPTH CONTROL LEVER		01
03	0503030975	0.9" X 1.5" X 0.1" SPRING		01
04	0581019519	FLAT WASHER		01
05	0503010071	3/16" X 1" COTTERPIN		01
06	0511065582	DEPTH WHEEL STOP		01
07	0503019398	AXLE RETAINER RING		01

COMPACTOR SUPPORT

0521051423

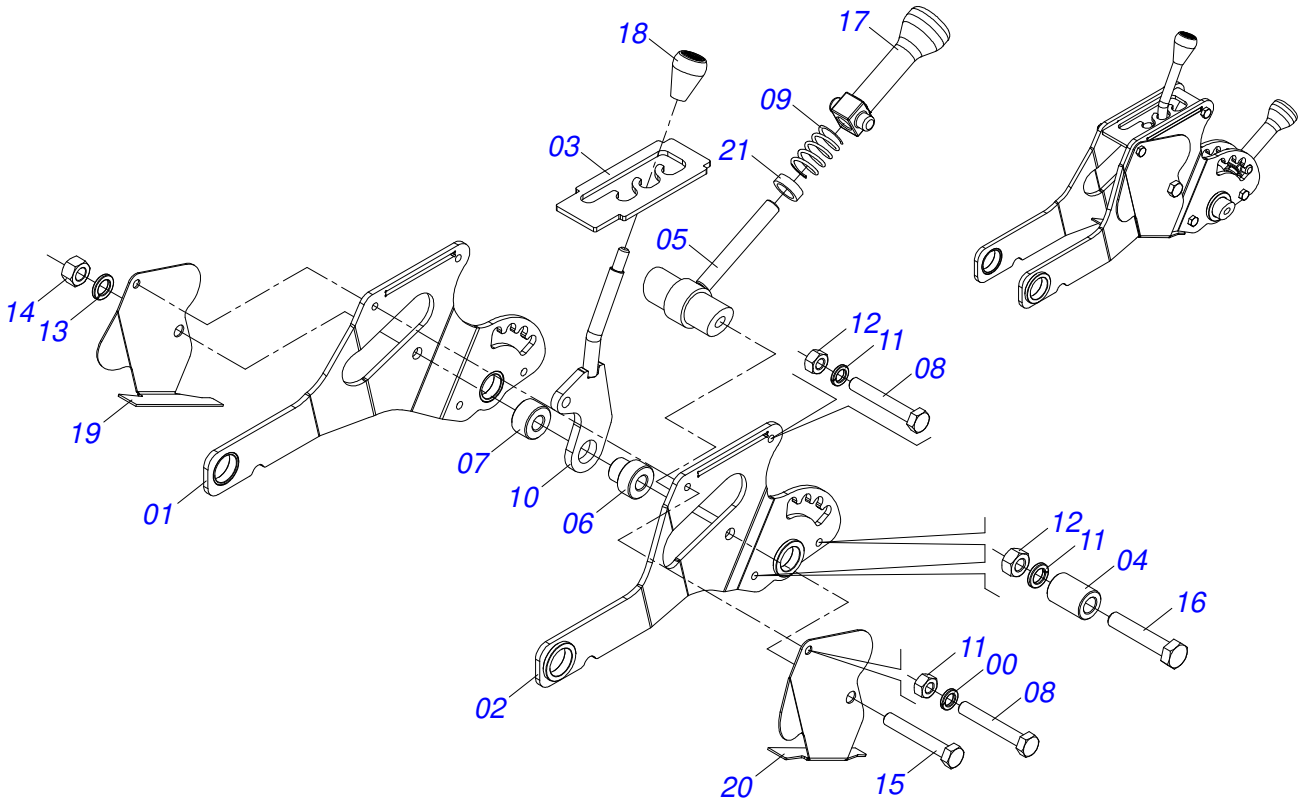

Item	Code	Description	See page	QT
01	0521068003	RIGHT SIDE		01
02	0521068002	LEFT SIDE		01
03	0581014847	PLATE UPPER		01
04	0581015855	SLEEVE		02
05	0521068004	HANDLE BODY		01
06	0581014969	SLEVE GUIDE		01
07	0581014968	SLEEVE FLANGE		01
08	0503010937	5/16" X 3" BOLT		02
09	0503032035	0.7" X 1.2" X 1" COMPRESSION SPRING		01
10	0521068005	LEVER		01
11	0503010179	LOCK WASHER		04
12	0503010337	5/16" NUT		04
13	0503010019	1/2" SPRING WASHER		01
14	0503010060	1/2" NUT		01
15	0503010847	1/2" X 3.1/4" BOLT		01
16	0503010882	BOLT		02
17	0502012877	PRESS WHEEL ADJUSTMENT LEVER		01
18	0503030878	LEVER CRANK		01
19	0581015854	RIGHT PROTECTION COVER		01
20	0581015853	LEFT PROTECTION COVER		01
21	0581015903	SPACER WASHER		01

WHEEL STRIPED

0511050077

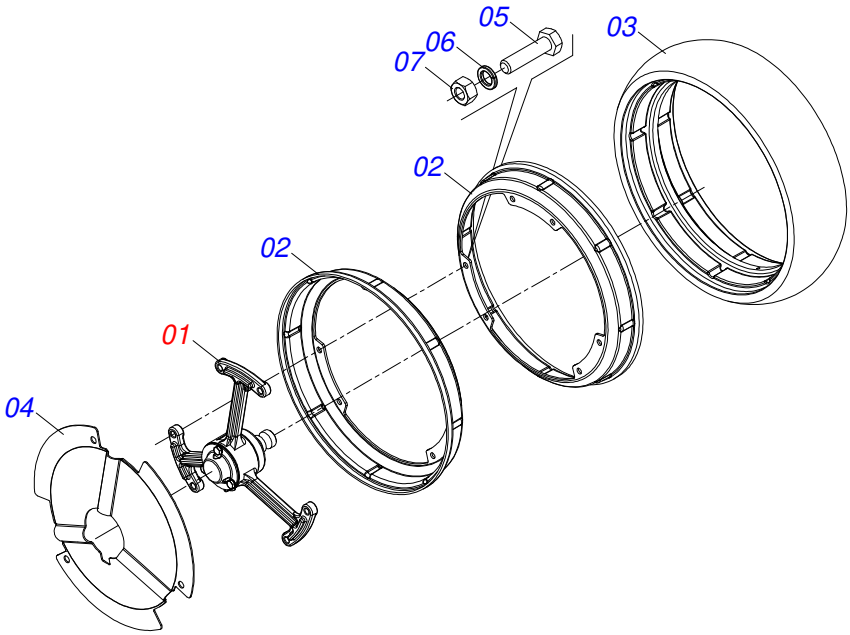

Item	Code	Description	See page	QT
01	0511052287	DEPTH WHEEL HUB ASSY	235	01
02	0551019904	PRESS WHEEL RIM		02
03	0503032970	RUBBER BAND		01
04	0561016889	STRIPED CAP WHEEL DEPTH		01
05	0503010365	NUT		06
06	0503010179	LOCK WASHER		06
07	0503010337	5/16" NUT		06

DEPTH WHEEL HUB ASSY

0511052287

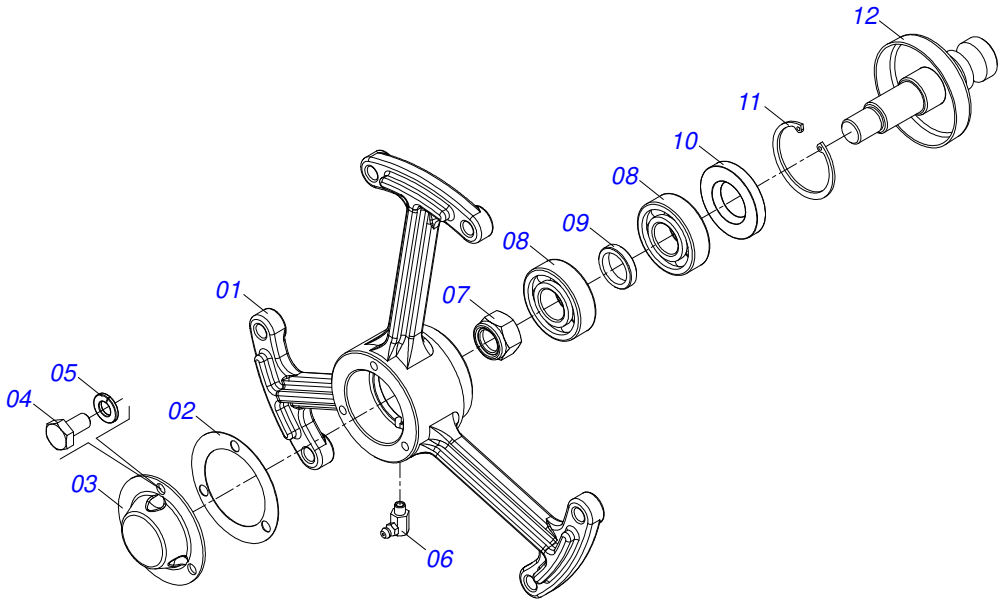

Item	Code	Description	See page	QT
01	0502011918	DEPHT WHEELS BOX		01
02	0503030757	2.9" X 2" X 0.02" JOINT		01
03	0521019178	COVER DEPTH		01
04	0503014729	1/4" UNF X 1/2" BOLT		03
05	0503010143	1/4" SPRING WASHER		03
06	0503011098	1/4" GREASE FITTING		01
07	0503010878	5/8" SELF ALIGNING NUT		01
08	0503010269	6204 BALL BEARING		02
09	0501013636	SPACING SLEEVE		01
10	0503010689	SEAL 00763-BR		01
11	0503011105	SEAL RING		01
12	0521063443	DEPTH CONTROL AXLE		01

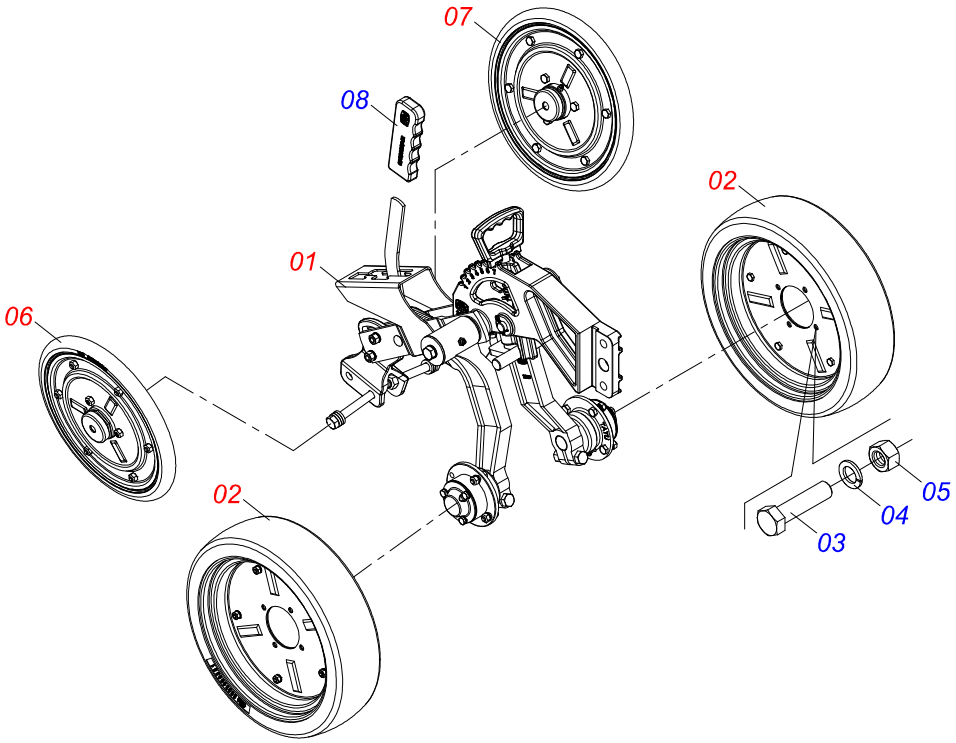

Item	Code	Description	See page	QT
01	0511059684	DEPTH CONTROL RPA	237	01
02	0501052538	DEPTH BAND WITH ARMS	206	02
03	0503010358	5/16" X 5/8" BOLT		08
04	0503010179	LOCK WASHER		08
05	0503013816	5/16" LOCKNUT		08
06	0511054334	COMPACT WHEEL LEFT WITH BEARING	208	01
07	0511054333	COMPACT WHEEL RIGHT WITH BEARING	207	01
08	0503033942	COVER REGULATORY WHEEL		01

DEPTH CONTROL RPA

0511059684

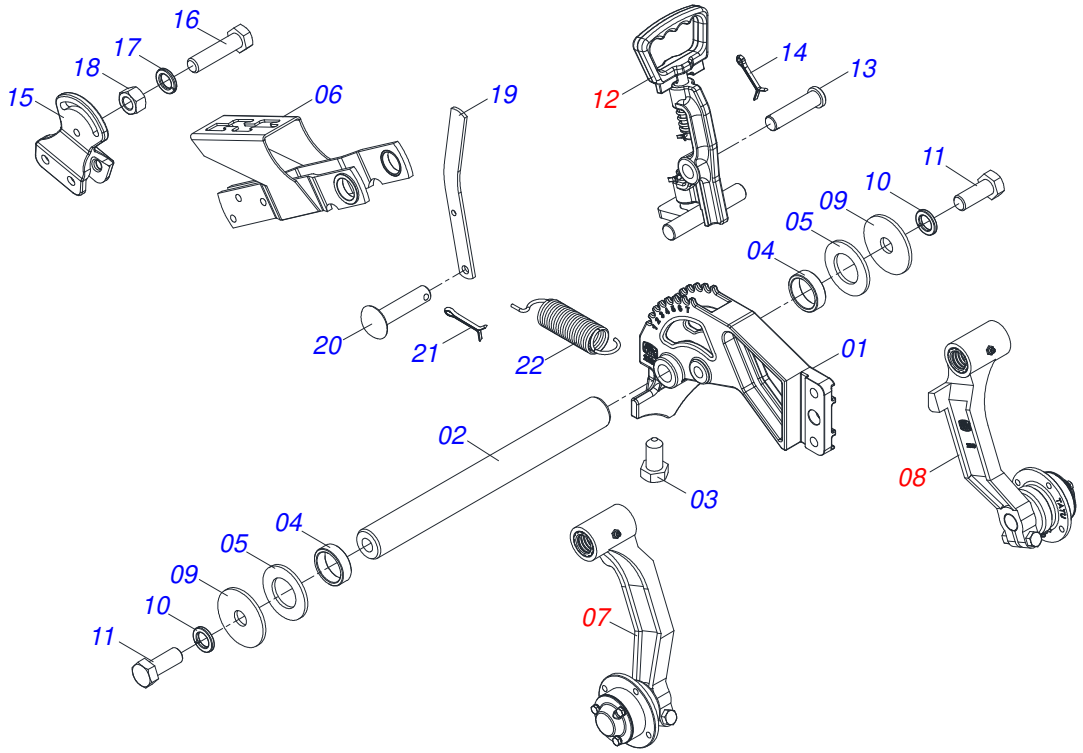

Item	Code	Description	See page	QT
01	0502012282	DEPTH CONTROL SUPPORT		01
02	0581011100	DEPTH WHEEL AXLE		01
03	0503010256	3/8" X 3/4" BOLT		01
04	0521010480	1" X 1.2" X 0.4" ARTICULAT SLEEVE		02
05	0511015346	FLAT WASHER		02
06	0521064073	REGULACION WHEEL COMPACTOR		01
07	0511059682	RIGHT ARM DEPTH CONTROL WHEEL	238	01
08	0511059683	LEFT ARM DEPTH CONTROL WHEEL	239	01
09	0571017749	FLAT WASHER		02
10	0503011440	SPRING WASHER		02
11	0541014307	1/2 UNC X1.1/2 BOLT		02
12	0501052297	DEPTH WHEELS REGULATOR ASSY	205	01
13	0521019093	0.6" X 2.7" PIVOT SHAFT		01
14	0503010257	1/8" X 1" COTTERPIN		01
15	1902012116	PRESS WHEEL ADJUSTER		01
16	0503010849	3/8" X 1-1/2" BOLT		02
17	0503011443	3/8" SPRING WASHER		02
18	0503010026	3/8" NUT		02
19	0541016906	PRESS WHEELS REGULATOR BODY		01
20	0521010539	0.3" X 1.2" COUPLING SHAFT		01
21	0503010140	1/8" X 3/4" COTTERPIN		01
22	0503030805	1.6" X 6" X 0.2 TRACTION SPRING		01

RIGHT ARM DEPTH CONTROL WHEEL

0511059682

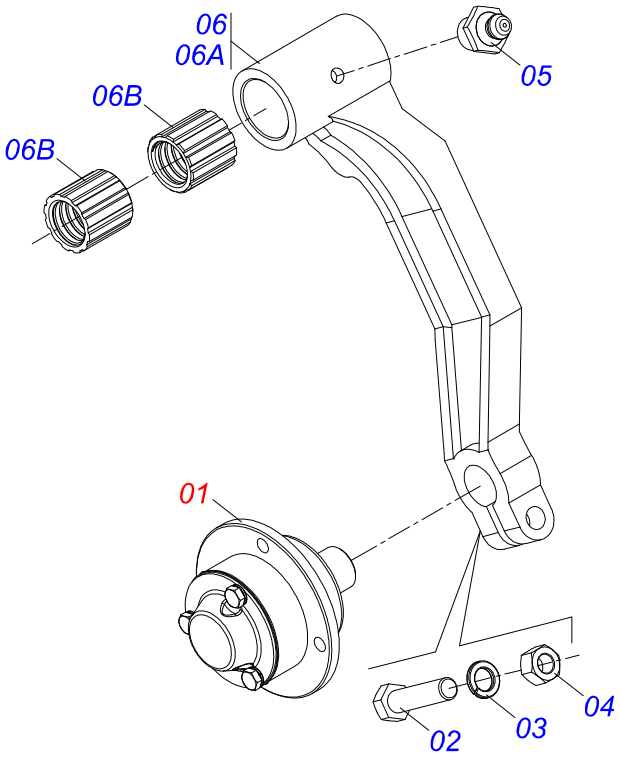

Item	Code	Description	See page	QT
01	0501058553	DEPHT WHEELS BOX RPA	240	01
02	0503010740	BOLT 1/2 UNC X 2 CS G.5 ZN		01
03	0503011440	SPRING WASHER		01
04	0503010060	1/2" NUT		01
05	0503010002	1800 GREASE FITTING		01
06	0501110833	DEPTH CONTROL RIGHT ARM		01
06A	0502012848	RIGHT WHEEL ARM DEPTH CONTROL		01
06B	0503034375	SLEVE ARM WHEEL DEPTH CONTROL		02

LEFT ARM DEPTH CONTROL WHEEL

0511059683

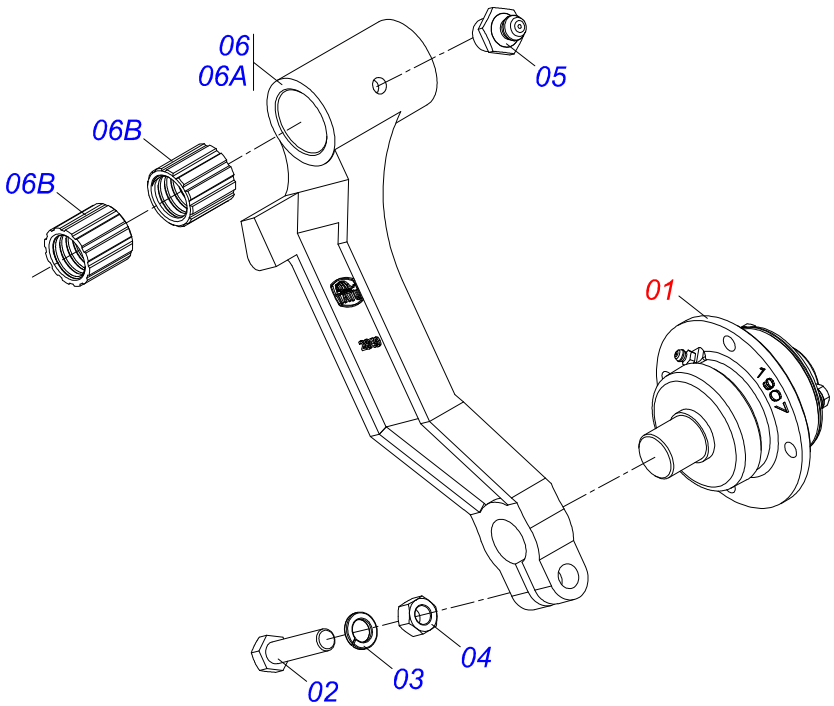

Item	Code	Description	See page	QT
01	0501058553	DEPHT WHEELS BOX RPA	240	01
02	0503010740	BOLT 1/2 UNC X 2 CS G.5 ZN		01
03	0503011440	SPRING WASHER		01
04	0503010060	1/2" NUT		01
05	0503010002	1800 GREASE FITTING		01
06	0501110834	LH ARM		01
06A	0502012849	LEFT WHEEL ARM DEPTH CONTROL		01
06B	0503034375	SLEVE ARM WHEEL DEPTH CONTROL		02

DEPHT WHEELS BOX RPA

0501058553

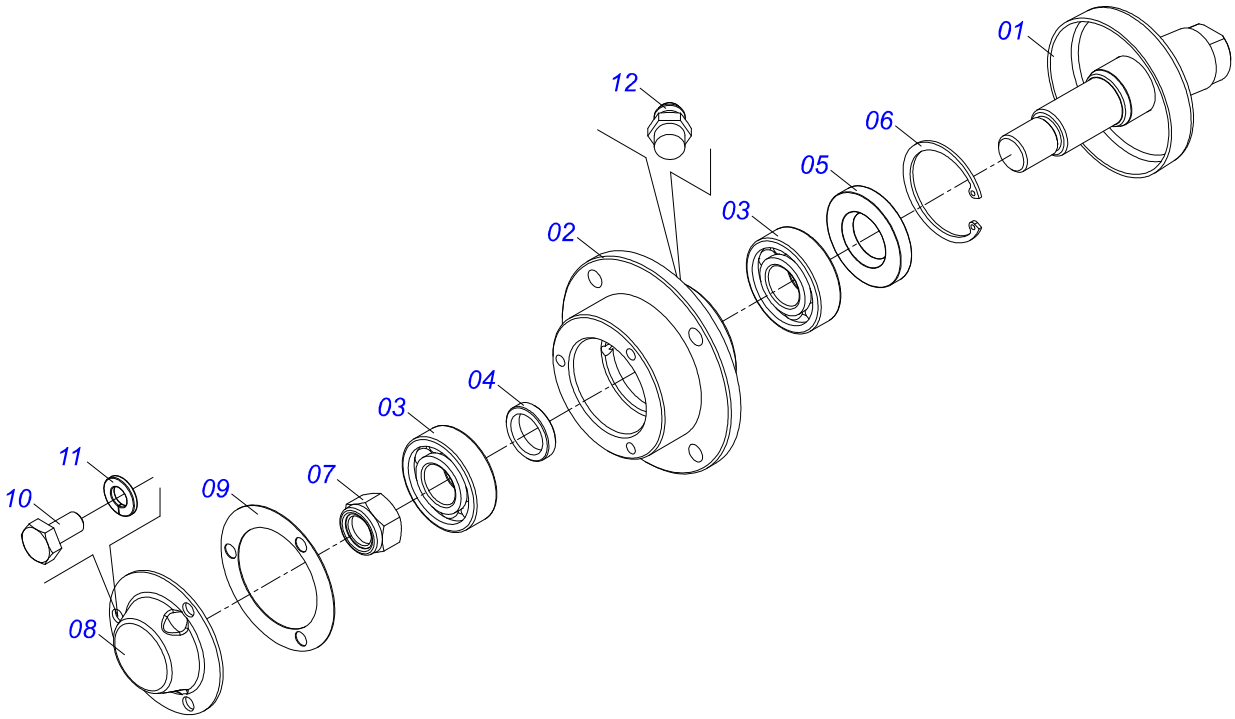

Item	Code	Description	See page	QT
01	0521060071	DEPTH CONTROL AXLE		01
02	0502011907	DEPTH CONTROL WHEEL HUB		01
03	0503010269	6204 BALL BEARING		02
04	0501013636	SPACING SLEEVE		01
05	0503010689	SEAL 00763-BR		01
06	0503011105	SEAL RING		01
07	0503010878	5/8" SELF ALIGNING NUT		01
08	0521019178	COVER DEPTH		01
09	0503030757	2.9" X 2" X 0.02" JOINT		01
10	0503013758	1/4" X 1-1/2" BOLT		03
11	0503011441	SPRING WASHER		03
12	0503010691	1/4" GREASE FITTING		01

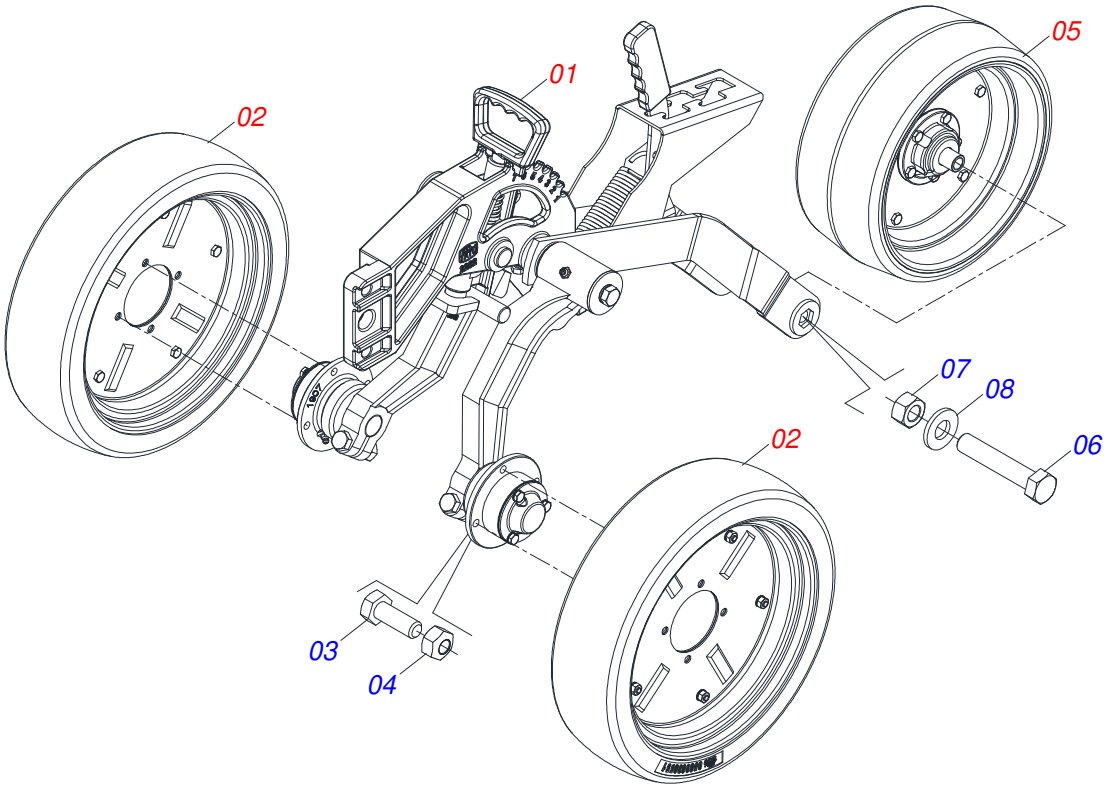

Item	Code	Description	See page	QT
01	0521059304	DEPTH CONTROL/WIDE COMPACTOR	242	01
02	0501052538	DEPTH BAND WITH ARMS	206	02
03	0503010358	5/16" X 5/8" BOLT		08
04	0503013816	5/16" LOCKNUT		08
05	0521055431	LONG COMPACTOR WHEEL	243	01
06	0503011411	1/2" X 5-1/2" BOLT		01
07	0503011336	1/2" HEX SELF ADJUSTING NUT		01
08	0501010937	13,50 X 28 X 3,00 FLAT WASHER		01

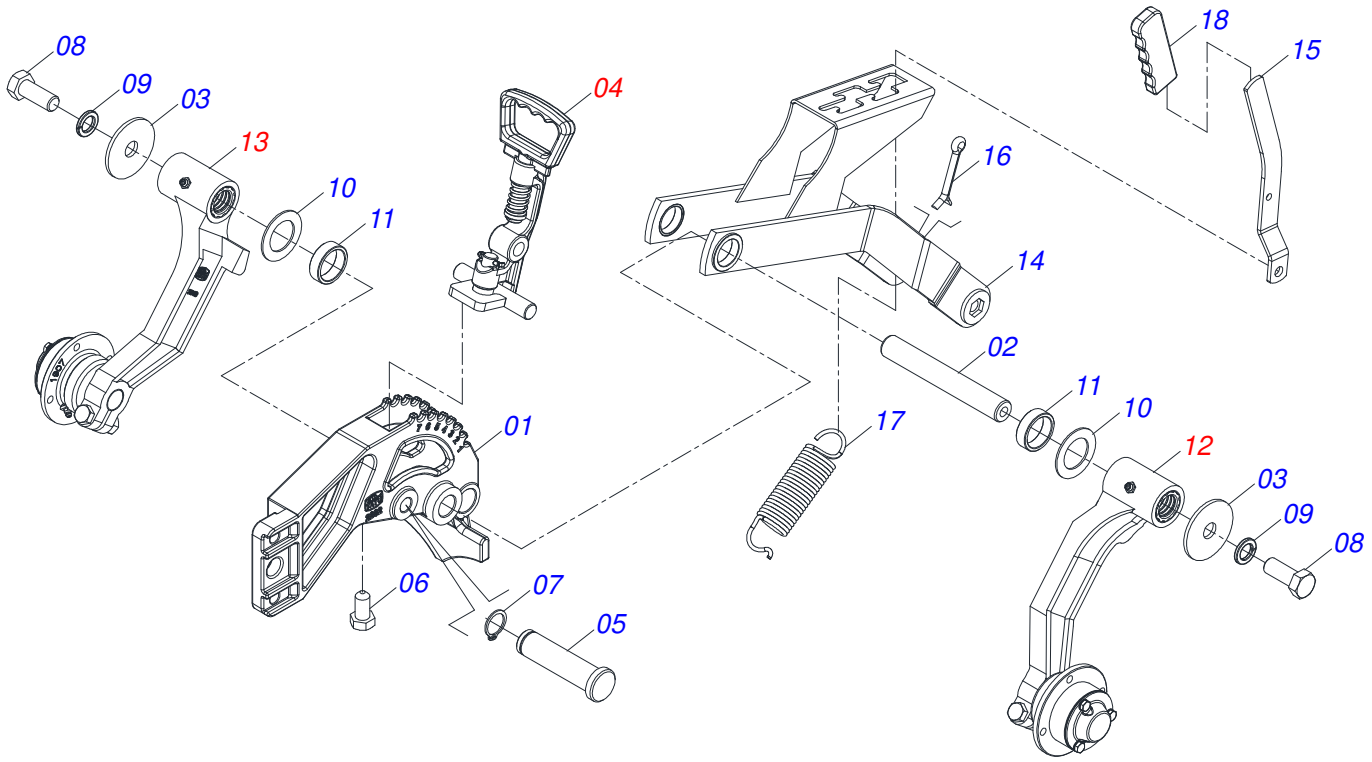

Item	Code	Description	See page	QT
01	0502012282	DEPTH CONTROL SUPPORT		01
02	0581011100	DEPTH WHEEL AXLE		01
03	0571017749	FLAT WASHER		02
04	0501052297	DEPTH WHEELS REGULATOR ASSY	205	01
05	0521019093	0.6" X 2.7" PIVOT SHAFT		01
06	0503034377	SCREEW 3/8 UNC X 3/4		01
07	0503010581	RING		01
08	0503010311	1/2" X 1-1/4" BOLT		02
09	0503010019	1/2" SPRING WASHER		02
10	0511015346	FLAT WASHER		02
11	0521010480	1" X 1.2" X 0.4" ARTICULAT SLEEVE		02
12	0511058652	LEFT ARM WHEEL DEPTH WITH CUBE	203	01
13	0511058651	RIGHT ARM WHEEL DEPTH WITH CUBE	202	01
14	0521069159	COMPACTOR WHEEL ADJUSTMENT WITHOUT LUBRICATION		01
15	0581018129	LEVER REGULATING WHEEL COMPACTOR WIDE		01
16	0503010140	1/8" X 3/4" COTTERPIN		01
17	0503030805	1.6" X 6" X 0.2 TRACTION SPRING		01
18	0503033942	COVER REGULATORY WHEEL		01

LONG COMPACTOR WHEEL

0521055431

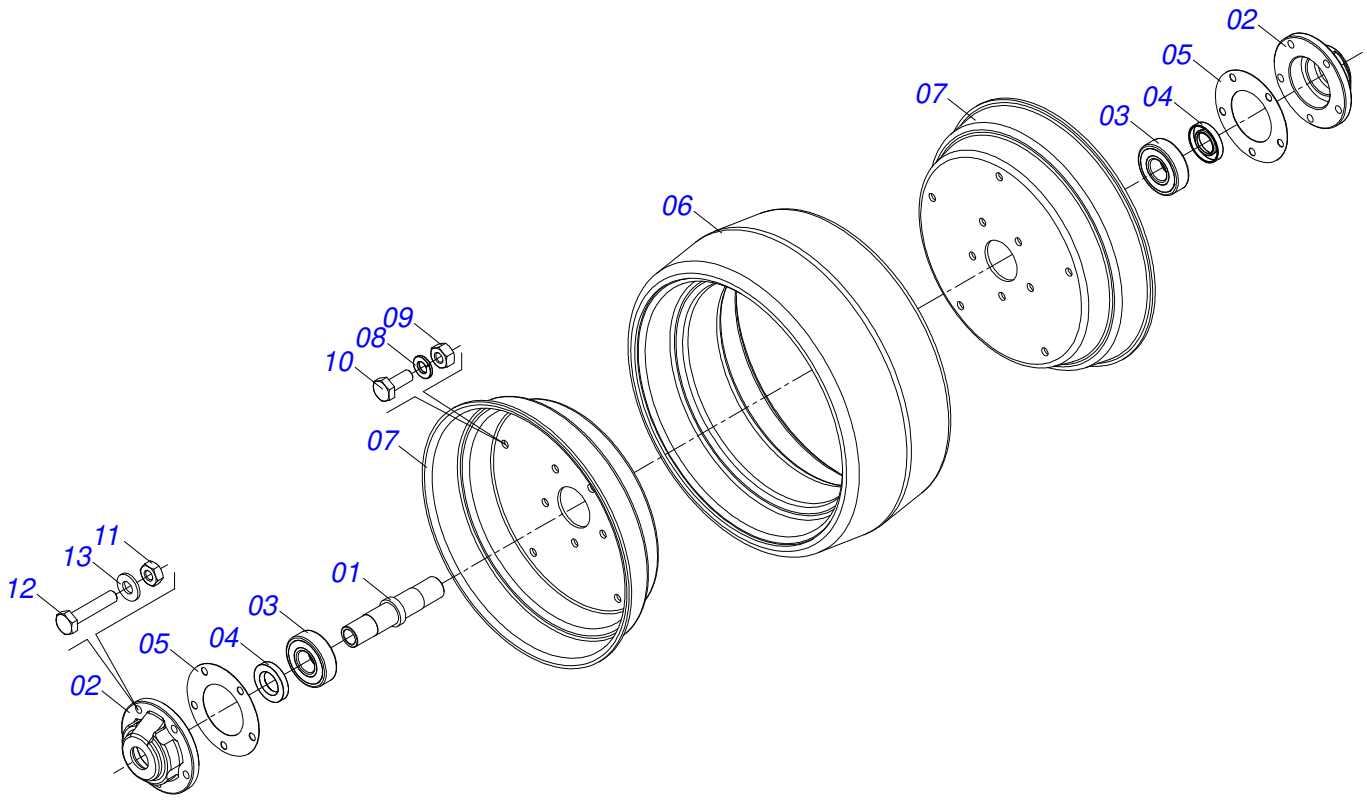

Item	Code	Description	See page	QT
01	0581018311	LONG SINGLE COMPACTOR WHEEL		01
02	0581018337	CUBE COMPACTING WHEEL		02
03	0503019309	BEARING 6204-2RLD -V2		02
04	0503010272	SEAL 00715-BA		02
05	0503030143	3.3" X 1.9" X 0.1" JOINT		02
06	0503031514	DEPTH CONTROL WHEEL RUBBER BAND		01
07	0521014107	PRESS WHEEL RIM		02
08	0503010143	1/4" SPRING WASHER		05
09	0503010144	1/4" NUT		05
10	0503013815	1/4" X 5/8" BOLT		05
11	0503013814	1/4" NC LOCKNUT		05
12	0503010743	1/4" X 1-1/4" BOLT		05
13	0511017303	FLAT WASHER		05

SCARIFIER ROD WITH POINT

0501110804

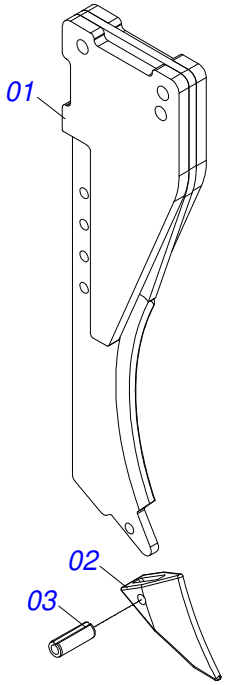

Item	Code	Description	See page	QT
01	0521065998	SCARIFIER SPINDLE		01
02	0502070061	POINT SUBSOILER		01
03	0503011373	0.4" X 1.1" SPRING PIN		01

SCARIFIER ROD WITH IAPAR NOZZLE

0501110814

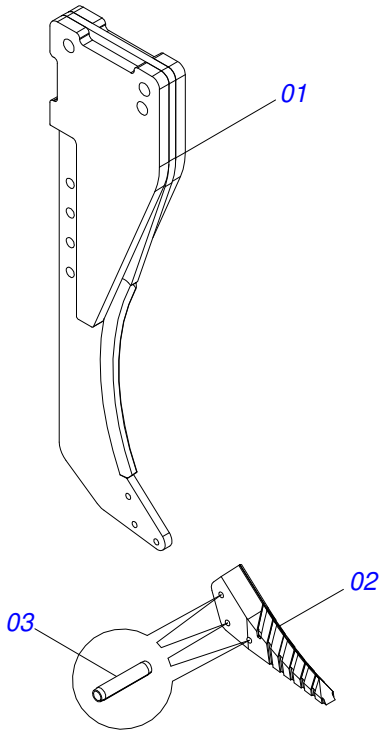

Item	Code	Description	See page	QT
01	0521066350	ROD SCARIFIER SPINDLE		01
02	1902070082	POINT SUBSOILER		01
03	0503010585	0,24" X 1.18" SPRING PIN		03

FIXER FERTILIZER CONDUCTOR

0521050525

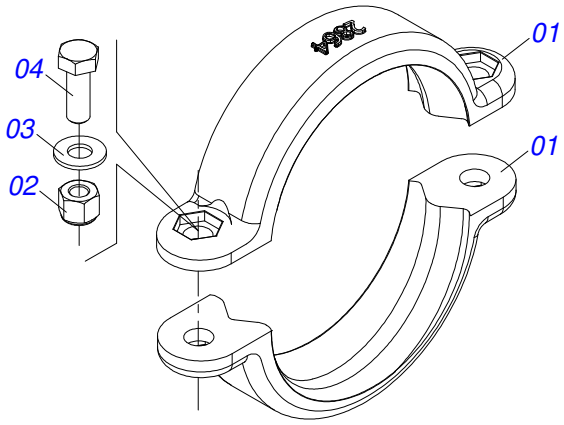

Item	Code	Description	See page	QT
01	1902012864	3 CLAMP		02
02	0503013759	NUT		02
03	0501010694	FLAT WASHER		02
04	0503010365	NUT		02

PIVOT SUPPORT

0531052986

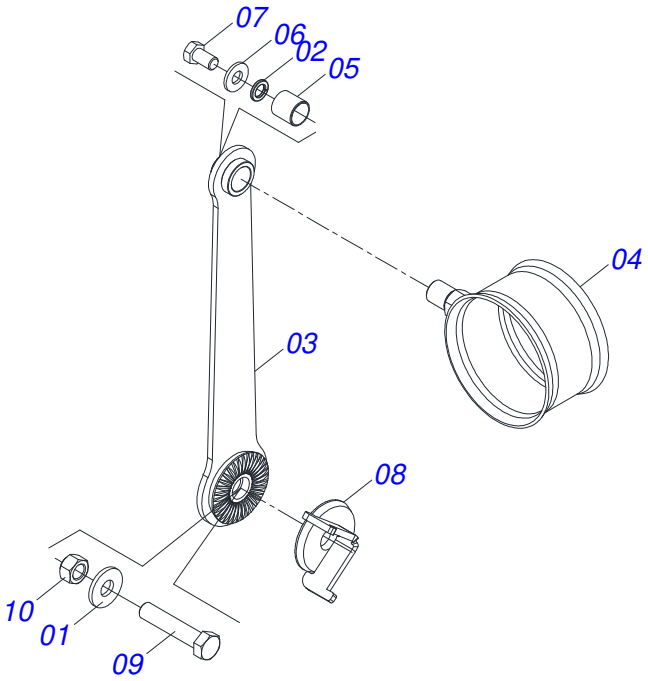

Item	Code	Description	See page	QT
01	0501012140	FLAT WASHER		01
02	0503010019	1/2" SPRING WASHER		01
03	0531062908	HOSE SUPPORT ARM		01
04	0531062907	ARTICULATOR HOSE		01
05	0513010322	LUBRICANT GLOVE		01
06	0501210533	FLANGE WASHER		01
07	0503013776	BOLT 1/2 UNC X 7/8 C S G.5 ZN		01
08	0521067600	FIXER SUPPORT		01
09	0503010806	5/8" X 3" BOLT		01
10	0503012795	5/8" HEX SELF ADJUSTING NUT		01

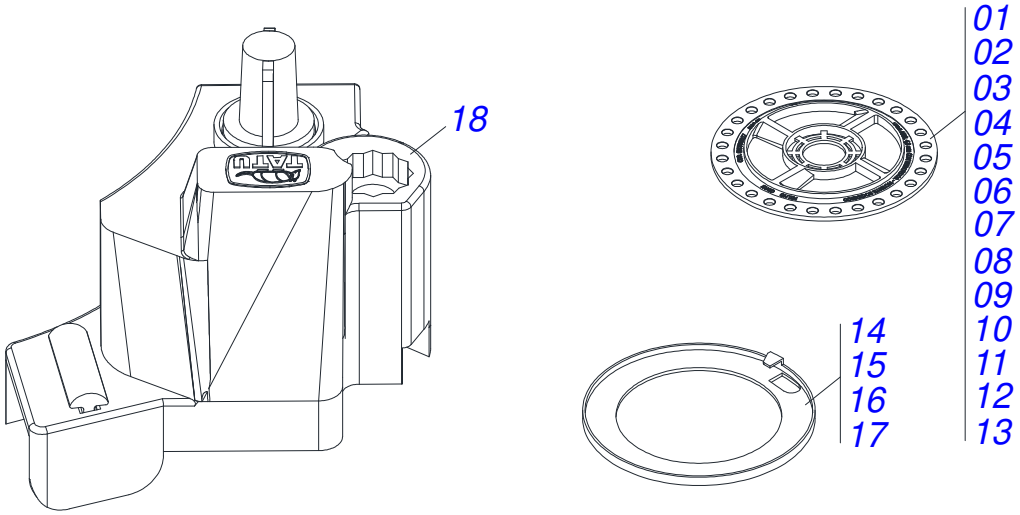

Item	Code	Description	See page	QT
01	0513010117	SOCIDISCO CORN DISC 28 HOLES 9,0 AMC9R-002130		01
02	0513010118	SOCIDISCO CORN DISC 28 HOLES 9,5 VLD9.5R-002115		01
03	0513010119	SOCIDISCO CORN DISC 28 HOLES 10 SAL10R-002619		01
04	0513010120	SOCIDISCO CORN DISC 28 HOLES 10,5 RSP10.5R-002133		01
05	0513010121	SOCIDISCO CORN DISC 28 HOLES 11 LRA11R-002134		01
06	0513010122	SOCIDISCO CORN DISC 28 HOLES 11,5 MAG11.5R-002620		01
07	0513010123	SOCIDISCO CORN DISC 28 HOLES 12 VDA12R-002621		01
08	0513010124	SOCIDISCO CORN DISC 28 HOLES 12,5 AMP12.5R-002131		01
09	0513010125	SOCIDISCO CORN DISC 28 HOLES 13 VMV13R-002132		01
10	0513010126	SOCIDISCO CORN DISC 28 HOLES 13,5 RXR13.5R-002136		01
11	0513010187	SOCIDISCO CORN DISC 28 HOLES 14,8 X 10 VM4-002581		01
12	0513010188	SOCIDISCO CORN DISC 28 HOLES 11 X 8 BR8.1-002589		01
13	0513010189	SOCIDISCO CORN DISC 28 HOLES 12,5 X 8,5 AZ8.2-002587		01
14	0513010164	SOCIDISCO FLAT RING FOR CORN AMFOSLISO-002127		01
15	0513010159	SOCIDISCO RING FOR CORN 0,8MM LRFOSSR08-002120		01
16	0513010160	SOCIDISCO RING FOR CORN 1,4MM VMFOSR1.4-002245		01
17	0513010163	SOCIDISCO RING FOR CORN 2,0MM VDFOSR2-002116		01
18	0503063413	CORN SEED DISTRIBUTOR BOX 4Z - 001798		01

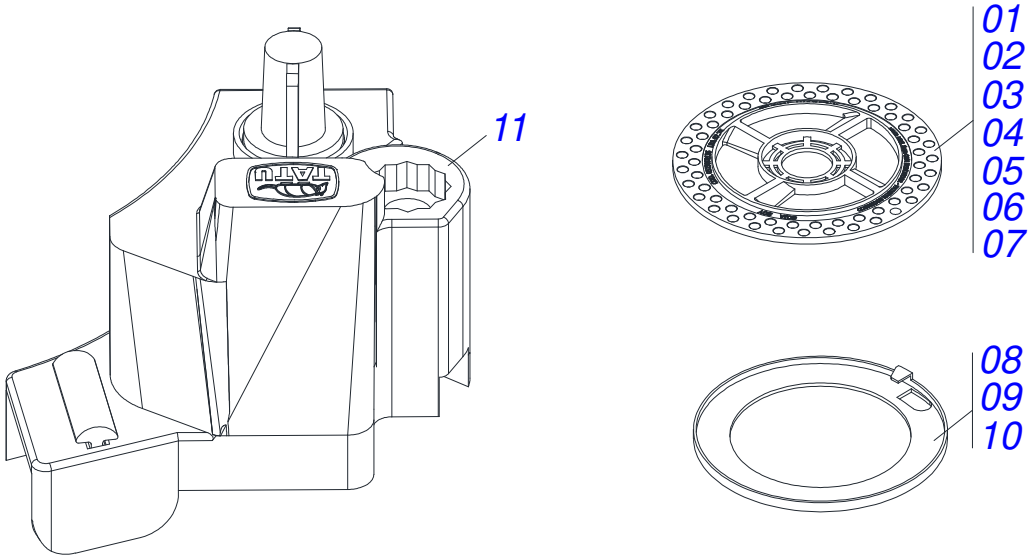

Item	Code	Description	See page	QT
01	0513010136	SOCIDISCO SOY DISC 62 HOLES 7,5 LRA62.75-002357		01
02	0513010137	SOCIDISCO SOY DISC 62 HOLES 8,0 RSP62.80-002358		01
03	0513010138	SOCIDISCO SOY DISC 62 HOLES 8,5 RXR62.85-002359		01
04	0513010139	SOCIDISCO SOY DISC 62 HOLES 9,0 AZM62.90-002360		01
05	0513010141	SOCIDISCO SOY DISC 90 HOLES 8,0 RSP90.80-002287		01
06	0513010142	SOCIDISCO SOY DISC 90 HOLES 8,5 RXR90.85-002317		01
07	0513010143	SOCIDISCO SOY DISC 90 HOLES 9,0 AZM90.90-002288		01
08	0513010158	SOCIDISCO FLAT RING FOR SOY AZMSOJALISO-002243		01
09	0513010161	SOCIDISCO RING FOR SOY 0,8MM AZCSOJAR08-002461		01
10	0513010162	SOCIDISCO RING FOR SOY 1,5MM RSPSOJASR1,5-002244		01
11	0503063412	4Z SOY/BEAN SEED DISTRIBUTOR BOX - 001804		01

FAST CLOSING SET

0511052024

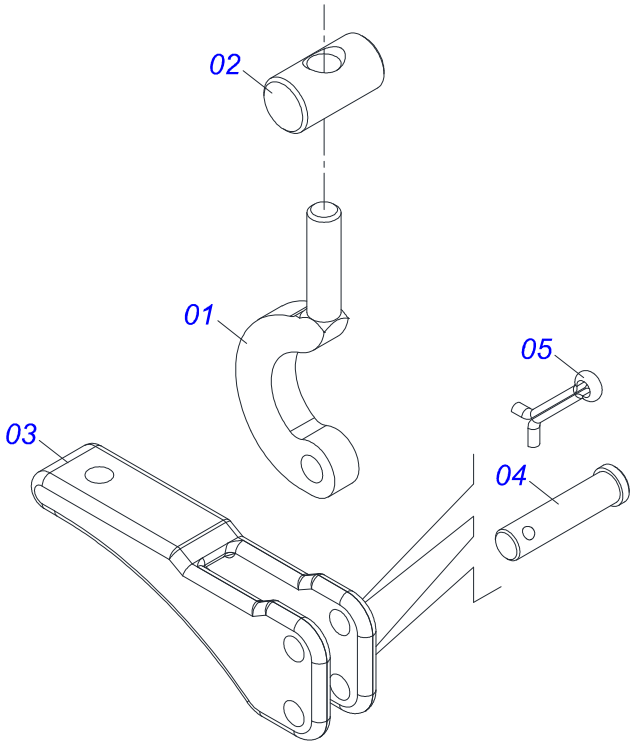

Item	Code	Description	See page	QT
01	0571011803	PRISONER CLOSE FAST		01
02	0571011804	FAST BOLT ADJUSTMENT		01
03	0502012744	SPEED LOCK LEVER ASSY		01
04	0571014024	FAST BOLT GUIDE AXLE		02
05	0503010140	1/8" X 3/4" COTTERPIN		02

FIXED ROD EXTENSION WITH FIXATION

0521057957

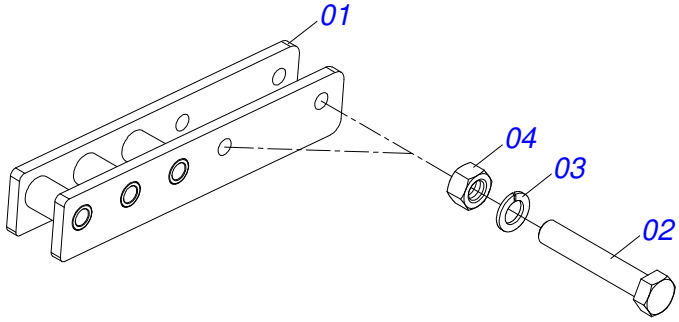

Item	Code	Description	See page	QT
01	0521068467	FIXED ROD EXTENSION		01
02	0503010479	BOLT		02
03	0503010019	1/2" SPRING WASHER		02
04	0503010060	1/2" NUT		02

18" CURVED CORRUGATED FERTILIZER DISC

0521059218

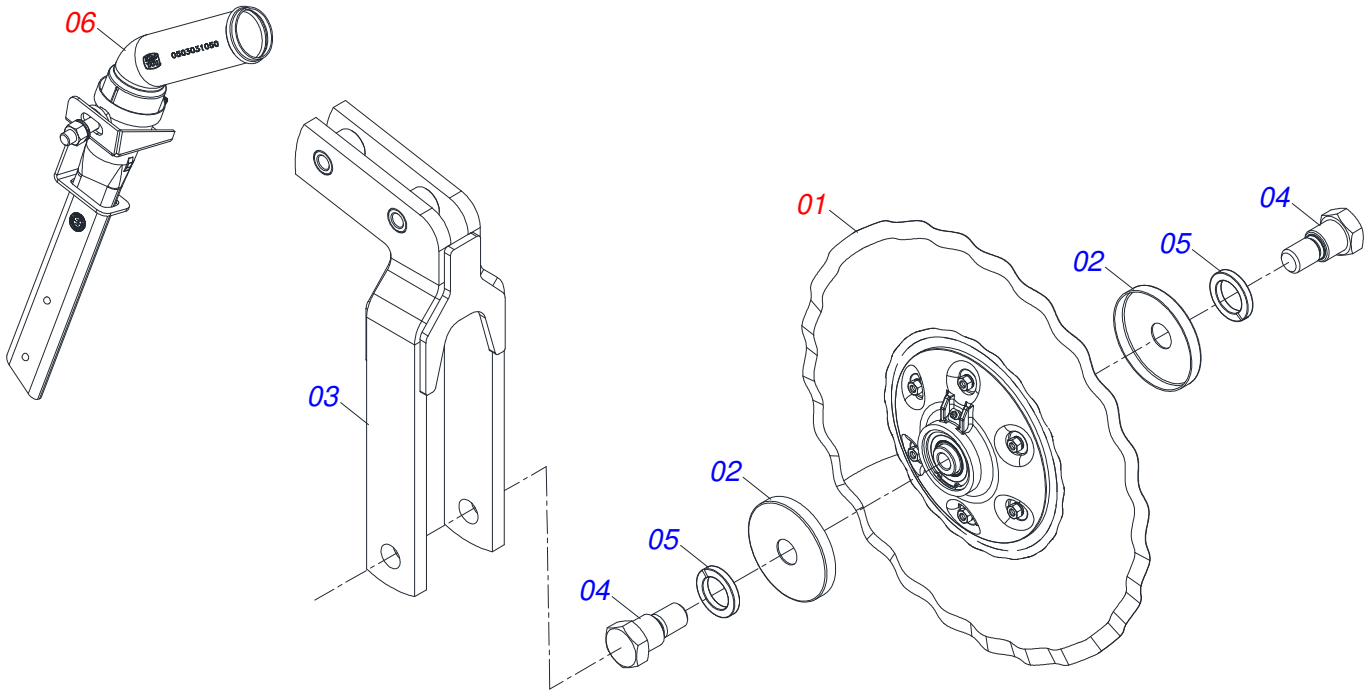

Item	Code	Description	See page	QT
01	0521059223	18" SEMI-ASSEMBLED FERTILIZER DISC	253	01
02	0521015376	DUST CLOAK		02
03	0531061291	18" CURVED CORRUGATED DISC SUPPORT		01
04	0591015207	DISC HUB FIXER		02
05	0503010012	1" SPRING WASHER		02
06	0521050168	MOUNTED FERTILIZER CONDUCTOR	254	01

18" SEMI-ASSEMBLED FERTILIZER DISC

0521059223

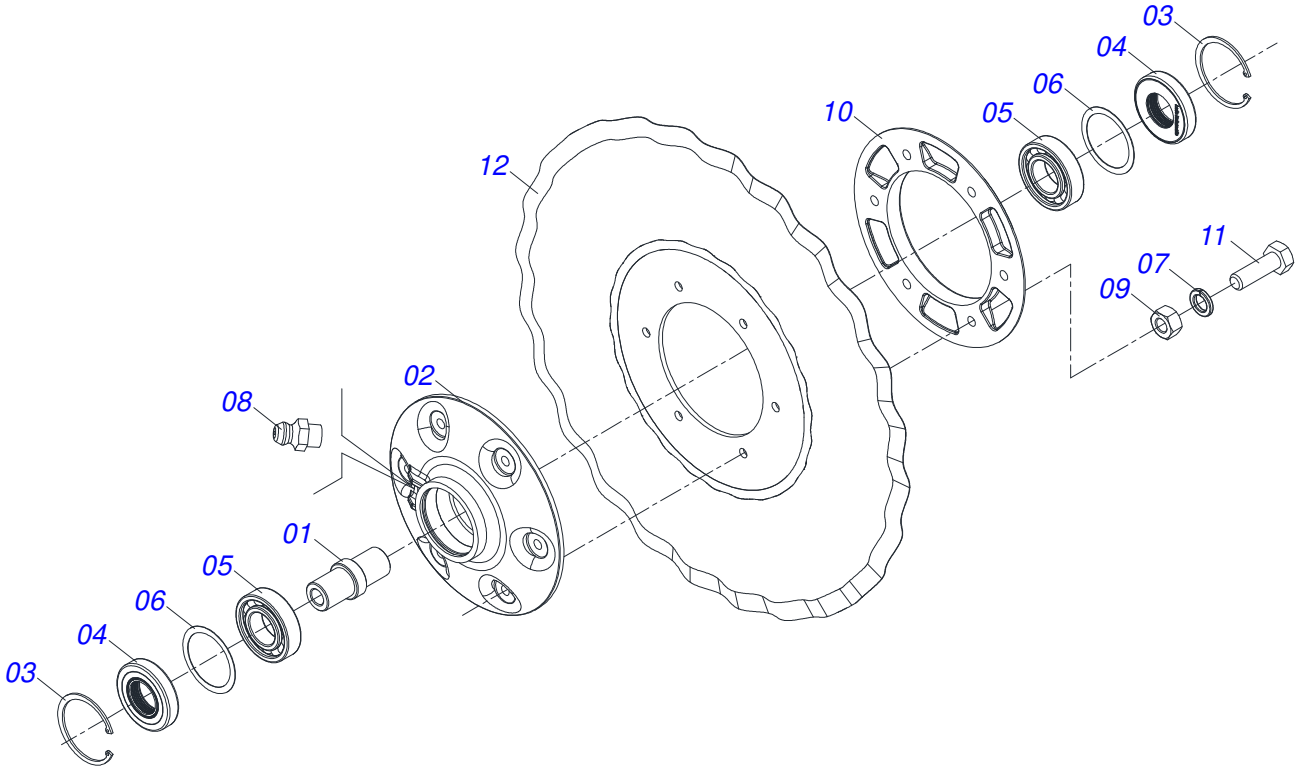

Item	Code	Description	See page	QT
01	0591015206	DISK HUB SHAFT		01
02	0502011562	DC BOX		01
03	0503011800	SEAL RING		02
04	0503012417	SEAL		02
05	0503010276	6206 BALL BEARING		02
06	0503030832	FLAT WASHER		02
07	0503011444	SPRING WASHER		06
08	0503010691	1/4" GREASE FITTING		01
09	0503010337	5/16" NUT		06
10	0502020641	BLADE DISC FLANGE		01
11	0503010371	5/16" X 1" BOLT		06
12	0607025032	PLAIN COULTER BLADE		01

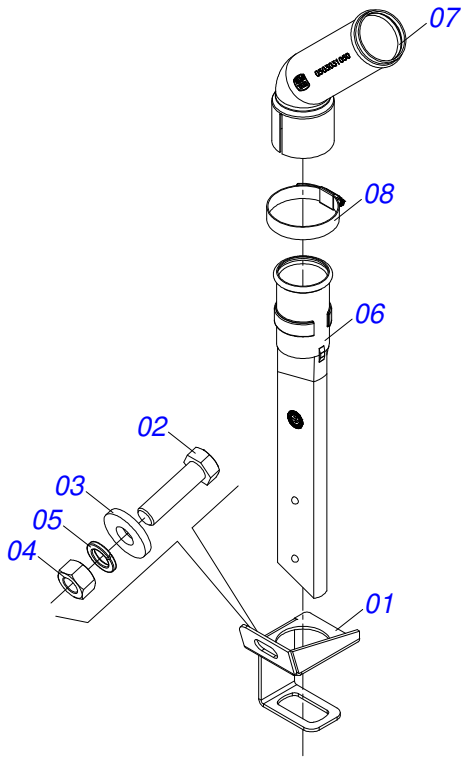

Item	Code	Description	See page	QT
01	0581013298	SUPPORT		01
02	0503010238	BOLT 1/2 UNC X 1.3/4 CS G.2 ZN		01
03	0521018517	FLAT WASHER		01
04	0503010060	1/2" NUT		01
05	0503010019	1/2" SPRING WASHER		01
06	0503030483	FERTILIZER SOCKET		01
07	0503031050	CURVED CONDUCTOR		01
08	0503010246	CLAMP		01

SCARIFIER SPINDLE WITH SOCKET RIGHT

0521053949

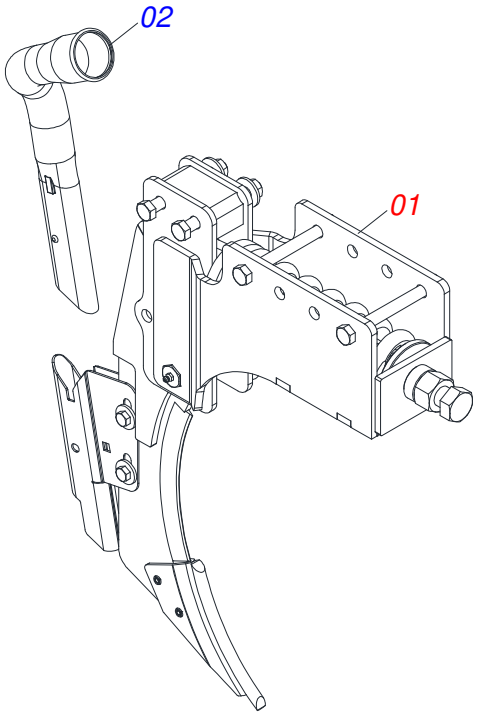

Item	Code	Description	See page	QT
01	0521053950	HDA AUTOMATIC DISARM	257	01
02	0581010082	FERTILIZER SOCKET RIGHT		01

SCARIFIER SPINDLE WITH SOCKET LEFT

0521053948

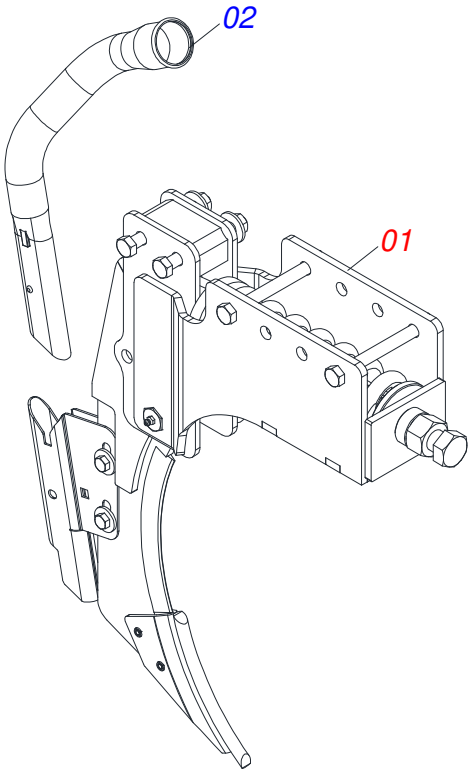

Item	Code	Description	See page	QT
01	0521053950	HDA AUTOMATIC DISARM	257	01
02	0581010083	FERTILIZER SOCKET LEFT		01

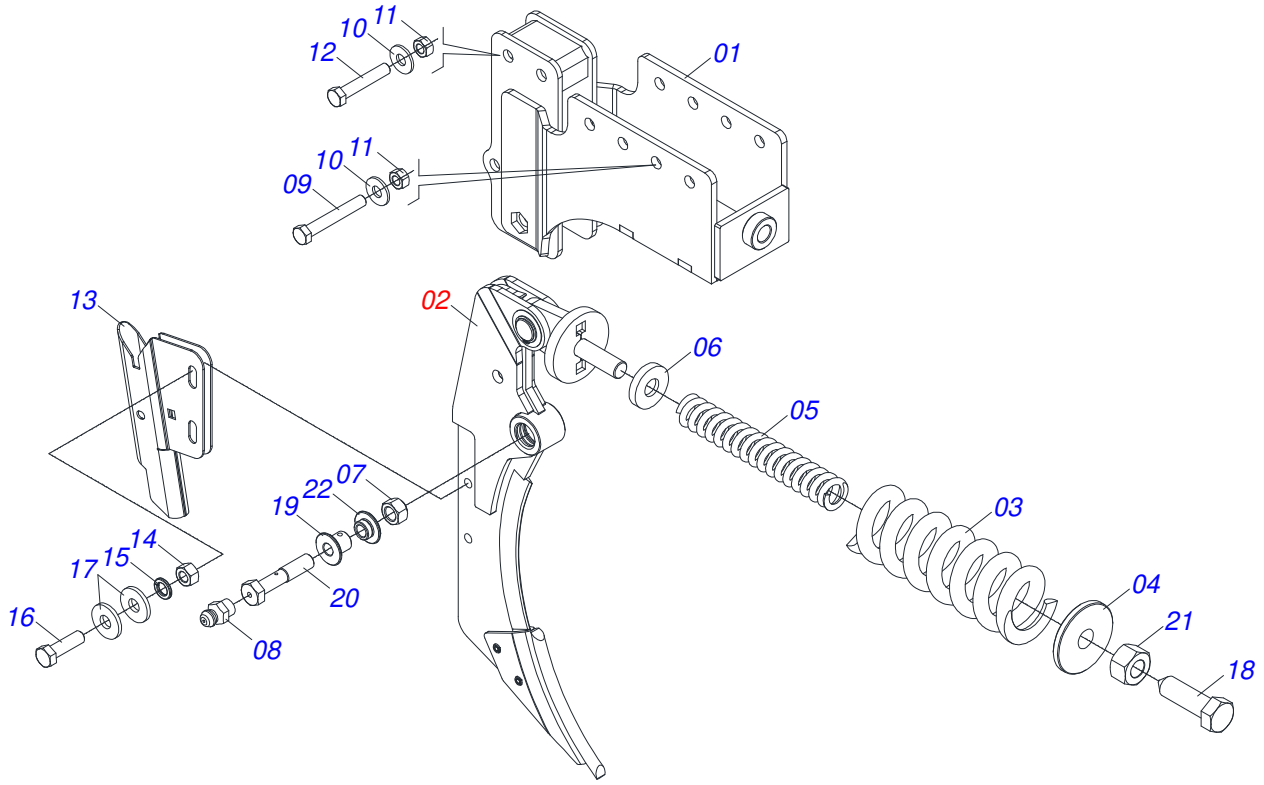

Item	Code	Description	See page	QT
01	0521067522	HDA SPRING BOX		01
02	0521053951	STEM	258	01
03	0503034106	80 X 230 X 16,50 HDA COMPRESSSION SPRING		01
04	0581012094	SUPPORT WASHER		01
05	0503033624	35 X 215 X 7,14 COMPRES SPRING		01
06	0571019462	SUPPORT GUIDE PRING		01
07	0503012795	5/8" HEX SELF ADJUSTING NUT		01
08	0503010691	1/4" GREASE FITTING		01
09	0503010384	1/2" X 5" BOLT		02
10	0511017302	FLAT WASHER		04
11	0503011336	1/2" HEX SELF ADJUSTING NUT		04
12	0503017874	BOLT 1/2 UNC		02
13	0571018541	BODY SOCKET FERTILIZER		01
14	0503010026	3/8" NUT		02
15	0503010025	3/8" SPRING WASHER		02
16	0503010751	C3/8" X 1.1/4" HEX BOLT G.5		02
17	0501010984	FLAT WASHER		04
18	0503017058	HEX 7/8 UNC X 3 CSRT PC G.5 ZN		01
19	0581012084	ARTICULATED SLEEVE		01
20	0581012082	SCREW		01
21	0503010417	7/8" NUT		01
22	0581012081	ARTICULATED SLEEVE		01

STEM

0521053951

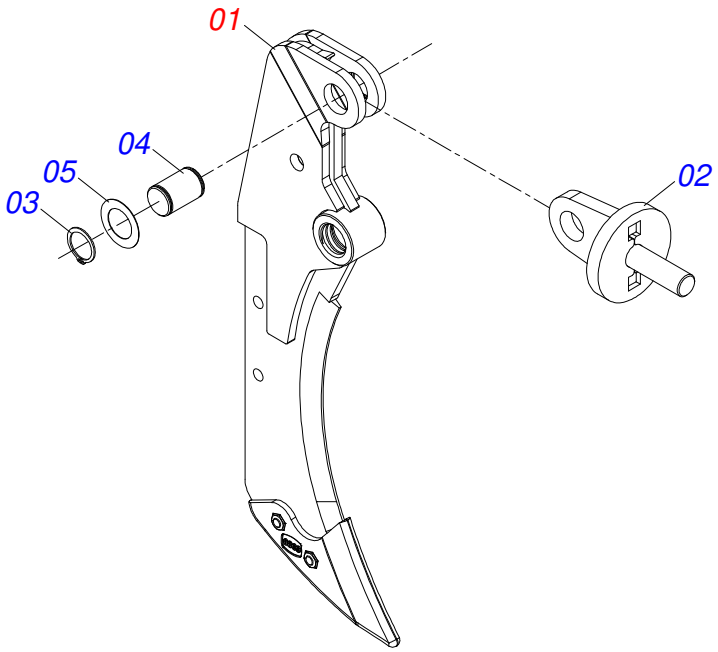

Item	Code	Description	See page	QT
01	0521053932	ROD WITH BEAK 0869	259	01
02	0521067065	FLANGE WASHER SPRING		01
03	0503010406	501025 CLAMPING RING (FOR AXLE)		02
04	0581012092	AXLE FIXER		01
05	0521015818	FLAT WASHER		02

ROD WITH BEAK 0869

0521053932

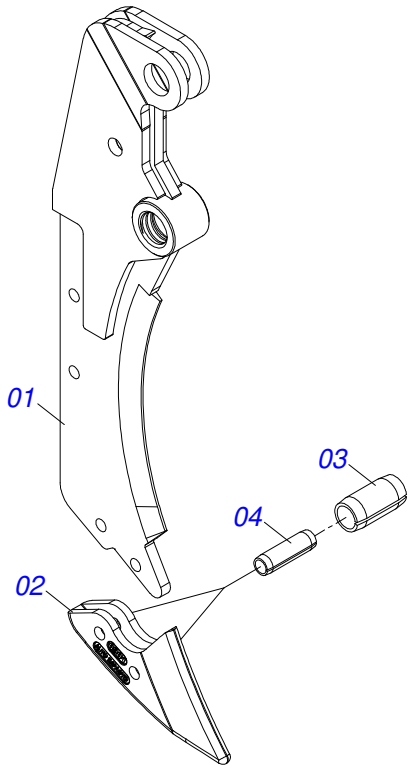

Item	Code	Description	See page	QT
01	0521067523	STEM WITHOUT BEAK DISARM		01
02	0502040901	FIXED ROD NOZZLE		01
03	0503016853	SPRING PIN		02
04	0503011402	0.2" X 0.8" SPRING PIN		02

ANNOTATION

TATU MARCHESAN

TATU MARCHESAN

Technical Publications | Elaboration and Revision
LEONARDO JOSÉ DA SILVA SOUZA

www.marchesan.com.br